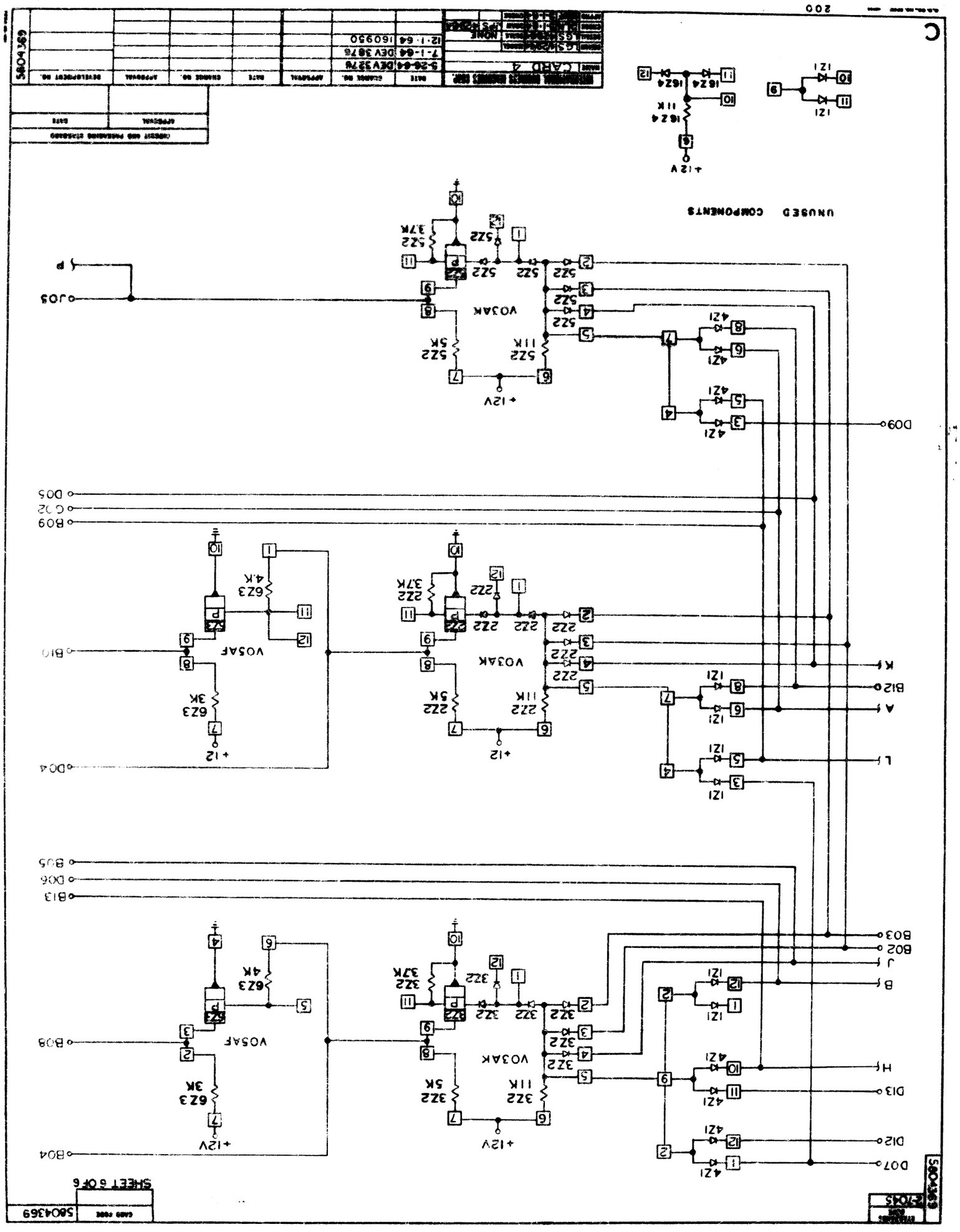
UNUSED COMPONENTS
VO3AK
VO5AF
+12V
B04
B08
B13
D06
B05
B09
C02
D05
D09
B10
D04
B12
K
A
L
D07
D12
D13
H
B
J
B02
B03
J05
P
CARD 4
5-26-64 DEV 3276
7-1-64 DEV 3876
12-1-64 160930
5804369
SHEET 6 OF 6