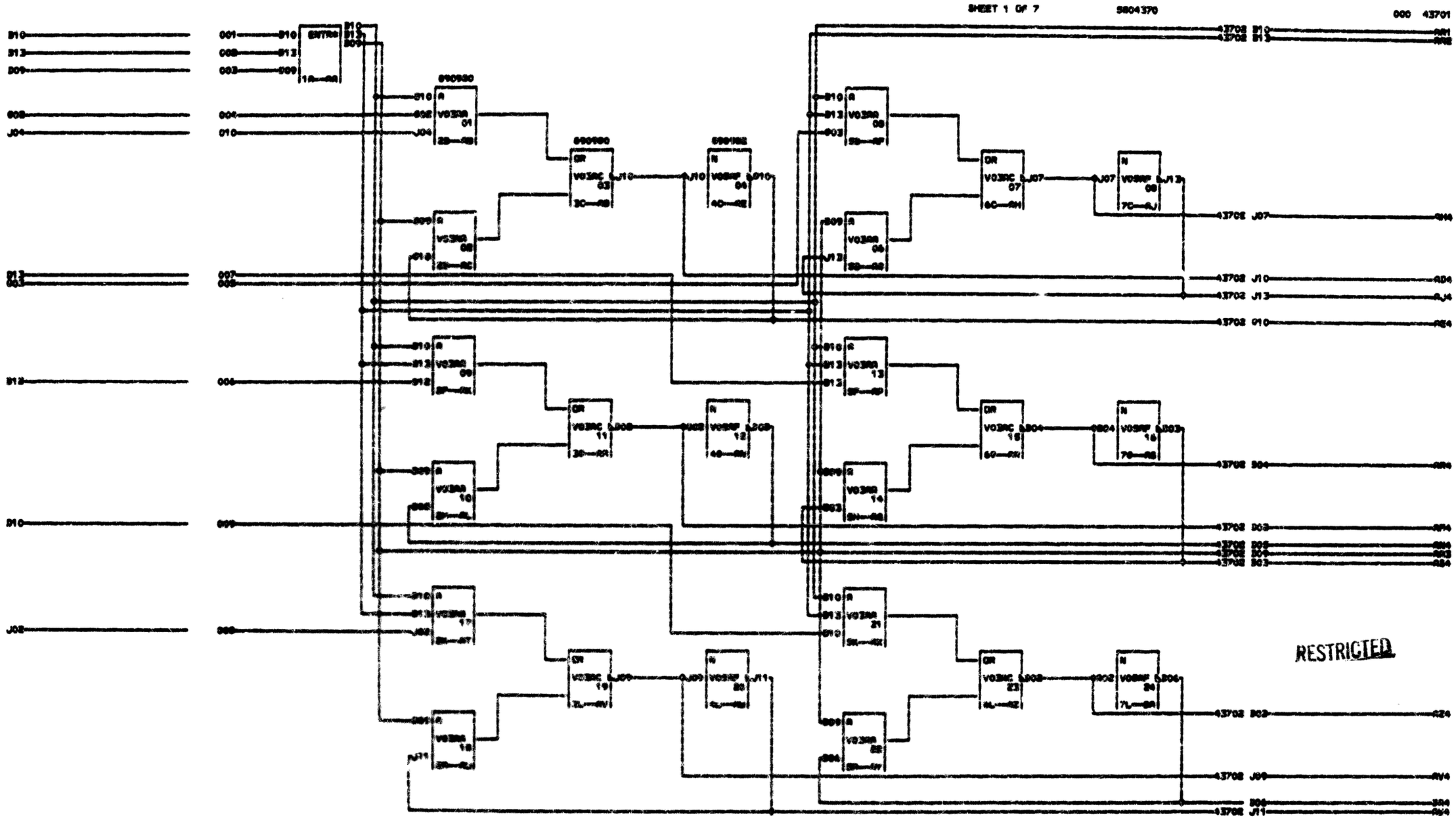

STANDARD RESTRICTED

CARD S
2-0 REGISTER
DATE 01-27-66 MACH. ASSEMBLY
LOG 0000 FRAME
C N SPECTT P.N. 5804370
IBM CORP. LX BLK. 98