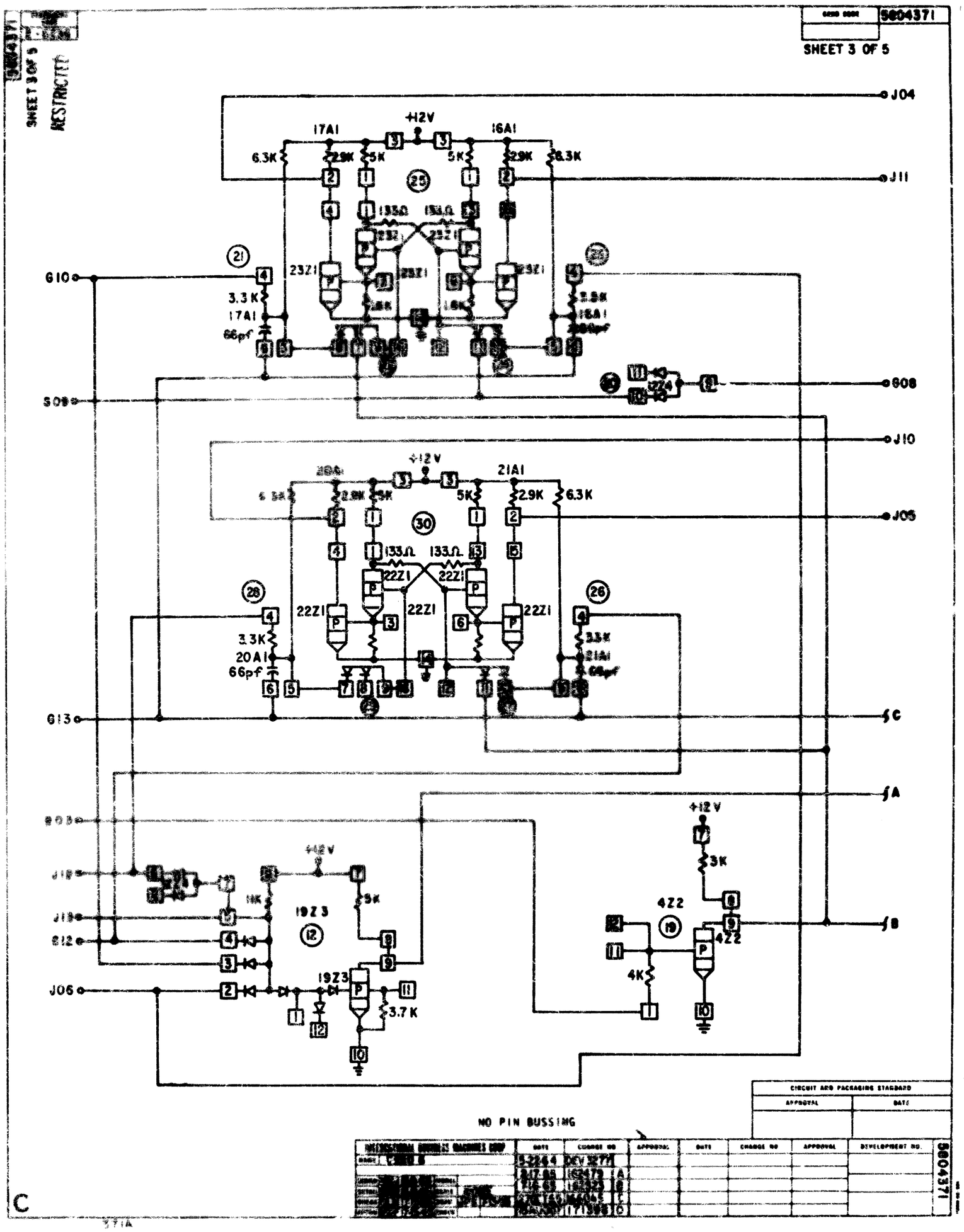
5604371
SHEET 3 OF 5
RESTRICTED
J04
J11
J10
J05
J08
J13
J12
J06
J19
+12V
17A1
16A1
6.3K
2.9K
5K
133Ω
23Z1
3.3K
66pf
20A1
21A1
22Z1
19Z3
1K
3.7K
4Z2
4K
3K
NO PIN BUSSING
CIRCUIT ARD PACKAGING STANDARD
APPROVAL
DATE
DEVELOPMENT NO.
C