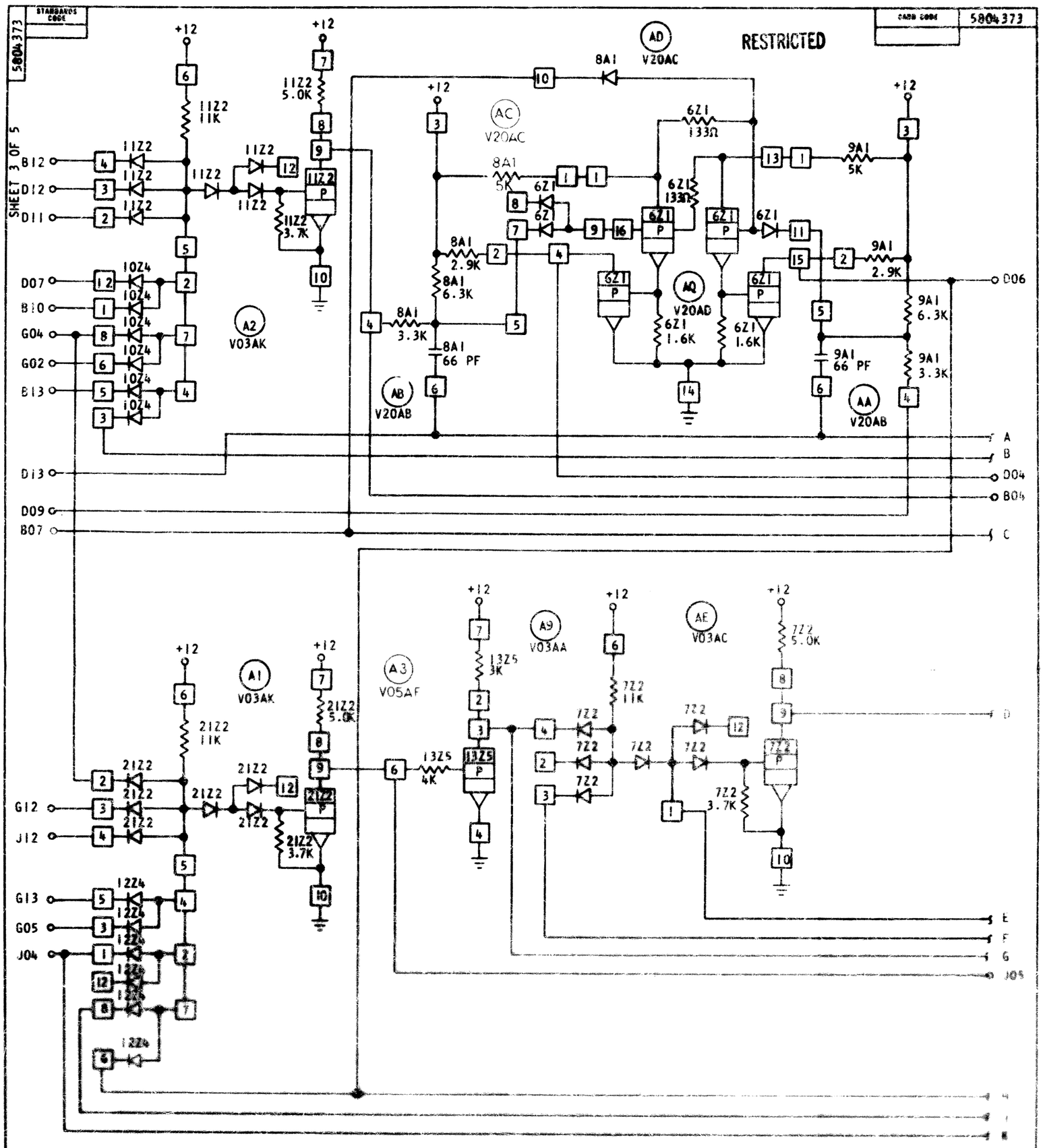

NOTE:
NO BUSSING CONDITION

CIRCUIT AND PACKAGING STANDARDS	
APPROVAL	DATE

INTERNATIONAL BUSINESS MACHINES CORP.	DATE	CHANGE NO.	APPROVAL	DATE	CHANGE NO.	APPROVAL	DEVELOPMENT NO.
NAME CARD ASSEMBLY-CARD 8	7-12-66	167954 B					5804373

C