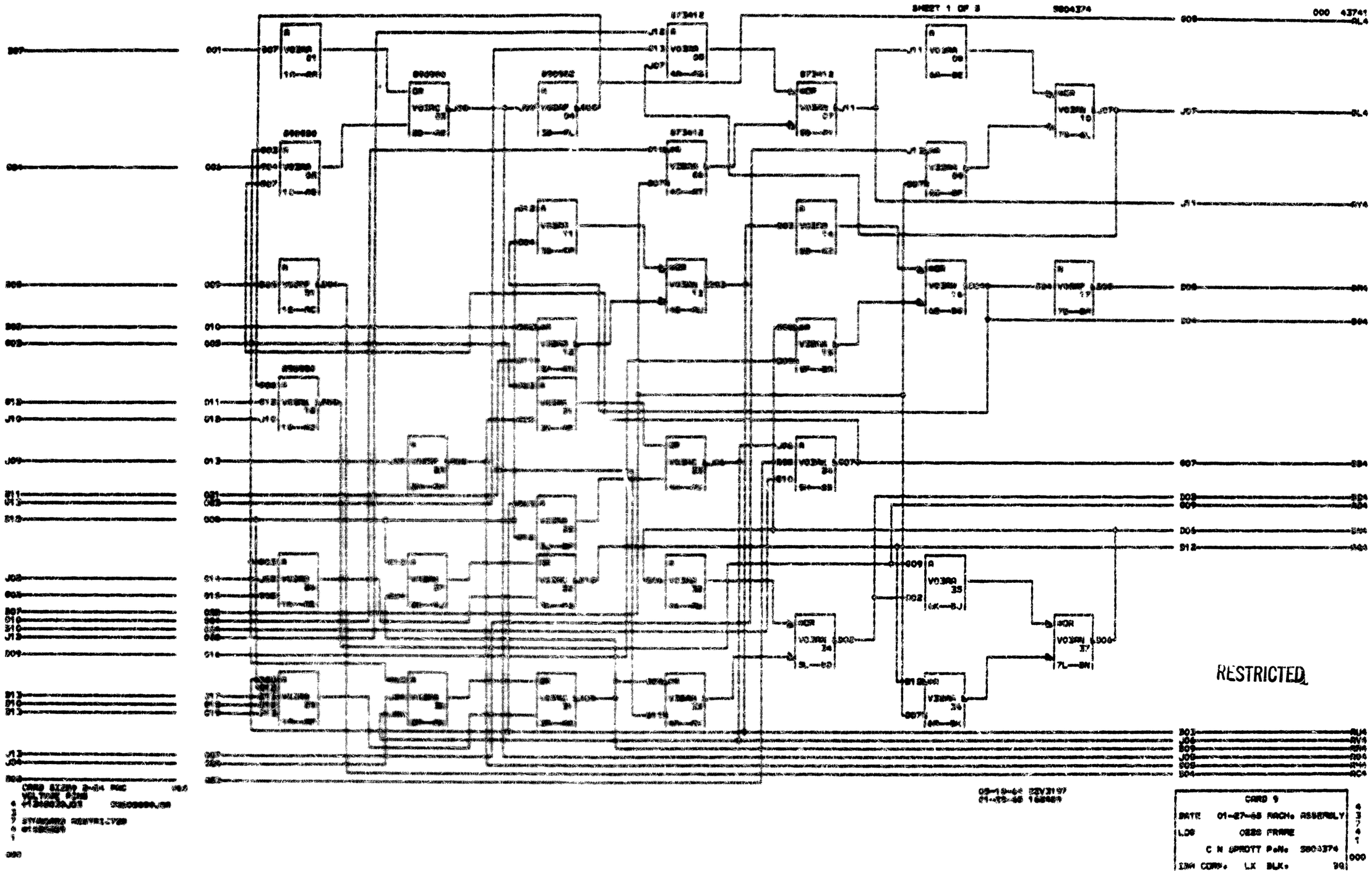
SHEET 1 OF 3
RESTRICTED
CARD 9
DATE 01-27-68 RACH. ASSEMBLY
LOG CEDS FRAME
C N SPROTT P.N. 3003374
IBM CORP. LX BLK. 90