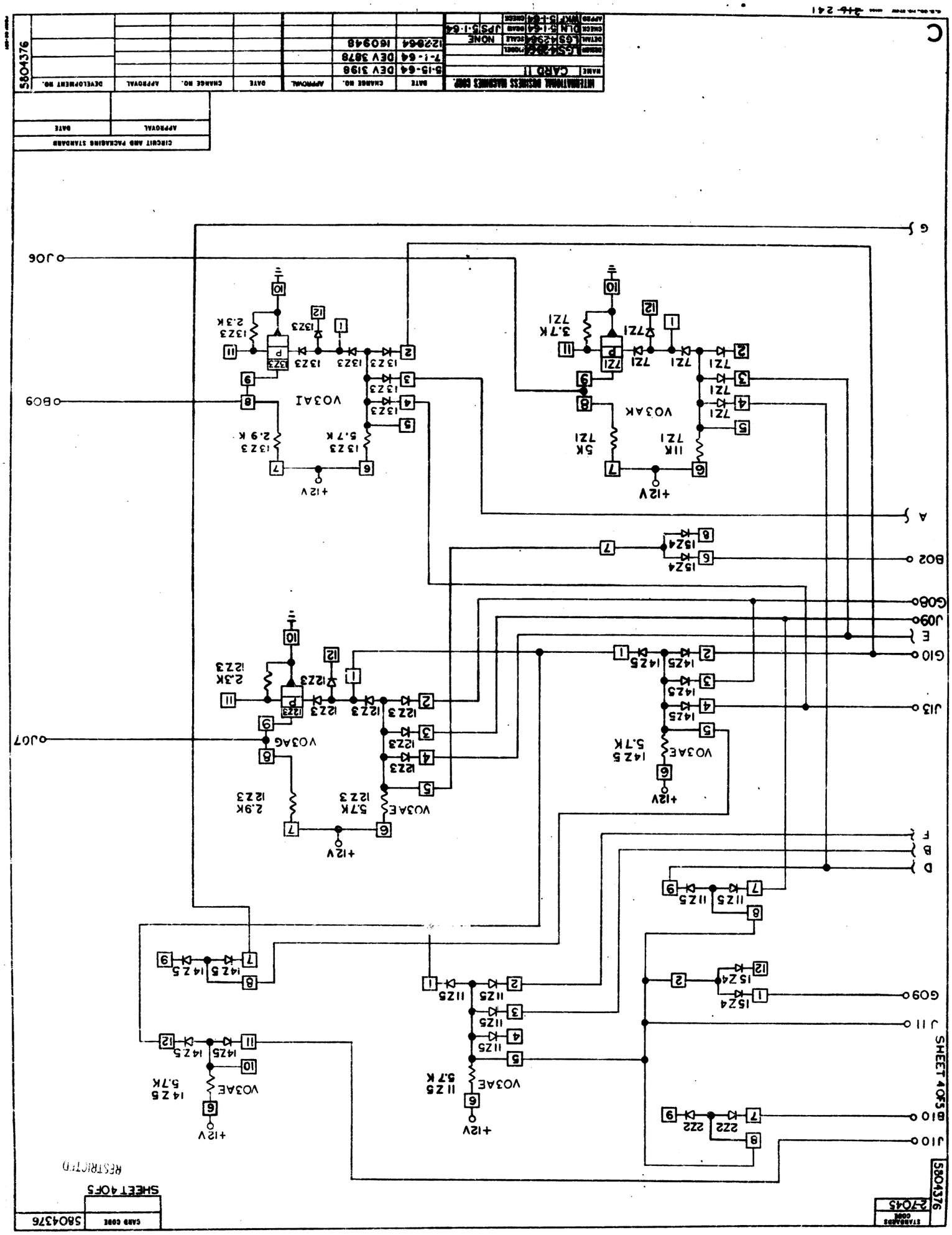
MILLIMATRONIX BUSINESS MACHINES CORP.
NAME CARD II
DATE 5-15-64 DEV 3198
7-1-64 DEV 3878
12-8-64 IG0948
DESIGN LSM
DETAIL LGS
CHECK DLM
APPRO WKT
SCALE NONE
DRAWN JPS
CHANGE NO.
APPROVAL
DATE
CHANGE NO.
APPROVAL
DEVELOPMENT NO.
5804376
CIRCUIT AND PACKAGING STANDARD
APPROVAL
DATE
C
SHEET 4 OF 5
RESTRICTED
CARD CODE
5804376
STANDARD CODE
2-70-45
+12V
VO3AE
5.7K
14Z5
VO3AG
2.9K
12Z3
VO3AK
11K
5K
7Z1
VO3AI
5.7K
2.9K
13Z3
2.3K
3.7K
15Z4
22Z2
J10
B10
J11
G09
J13
G10
E
J09
G08
B02
A
B09
J06
G
D
B
F
J07