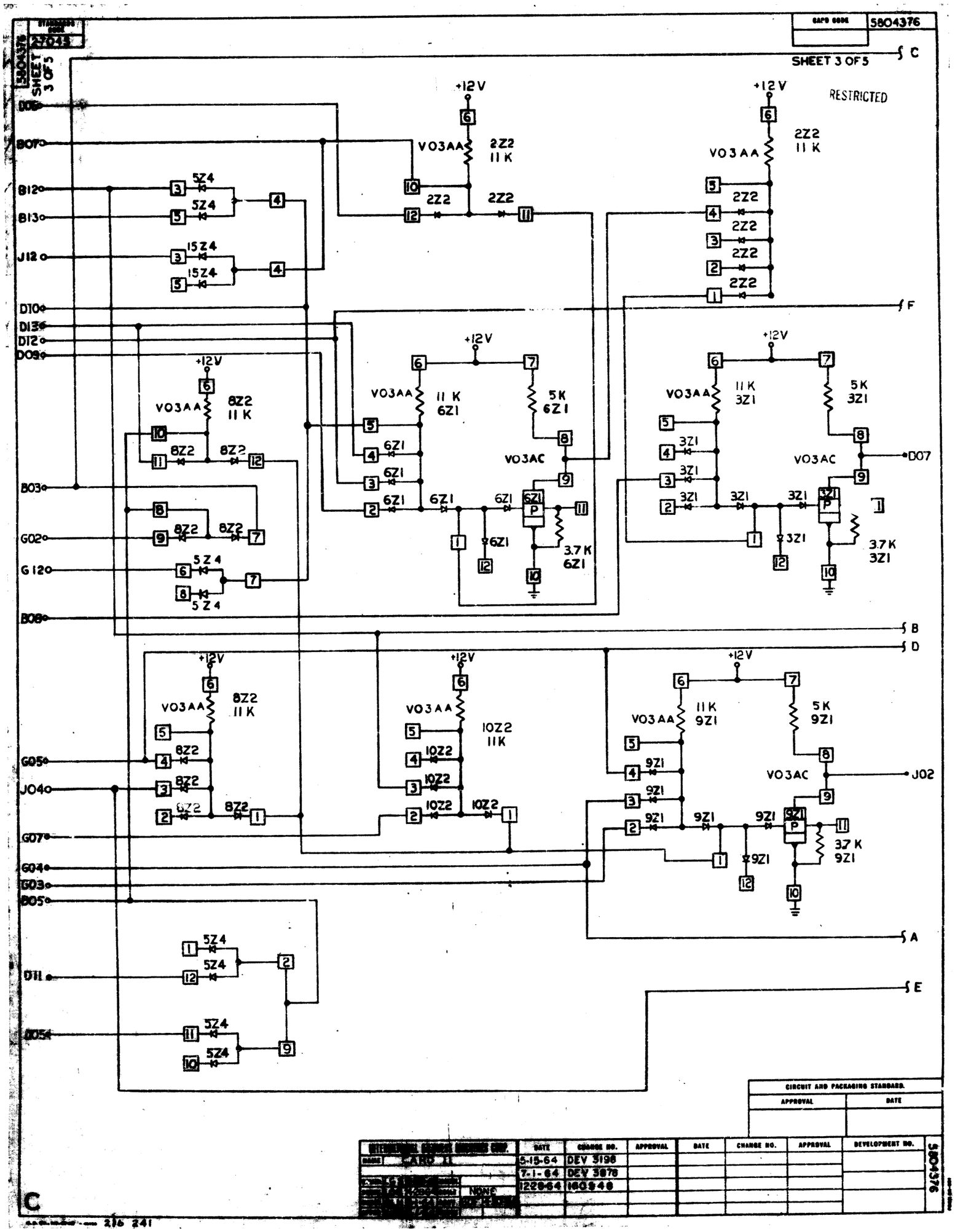

CIRCUIT AND PACKAGING STANDARDS	
APPROVAL	DATE

DATE	CHANGE NO.	APPROVAL	DATE	CHANGE NO.	APPROVAL	DEVELOPMENT NO.
5-15-64	DEV 3198					
7-1-64	DEV 3876					
12-28-64	160948					

5804376

C

216 241