5804378 SHEET 5 OF 5

STANDARDS CODE 2-6236

CARD CODE 5804378

SHEET 5 OF 5

RESTRICTED

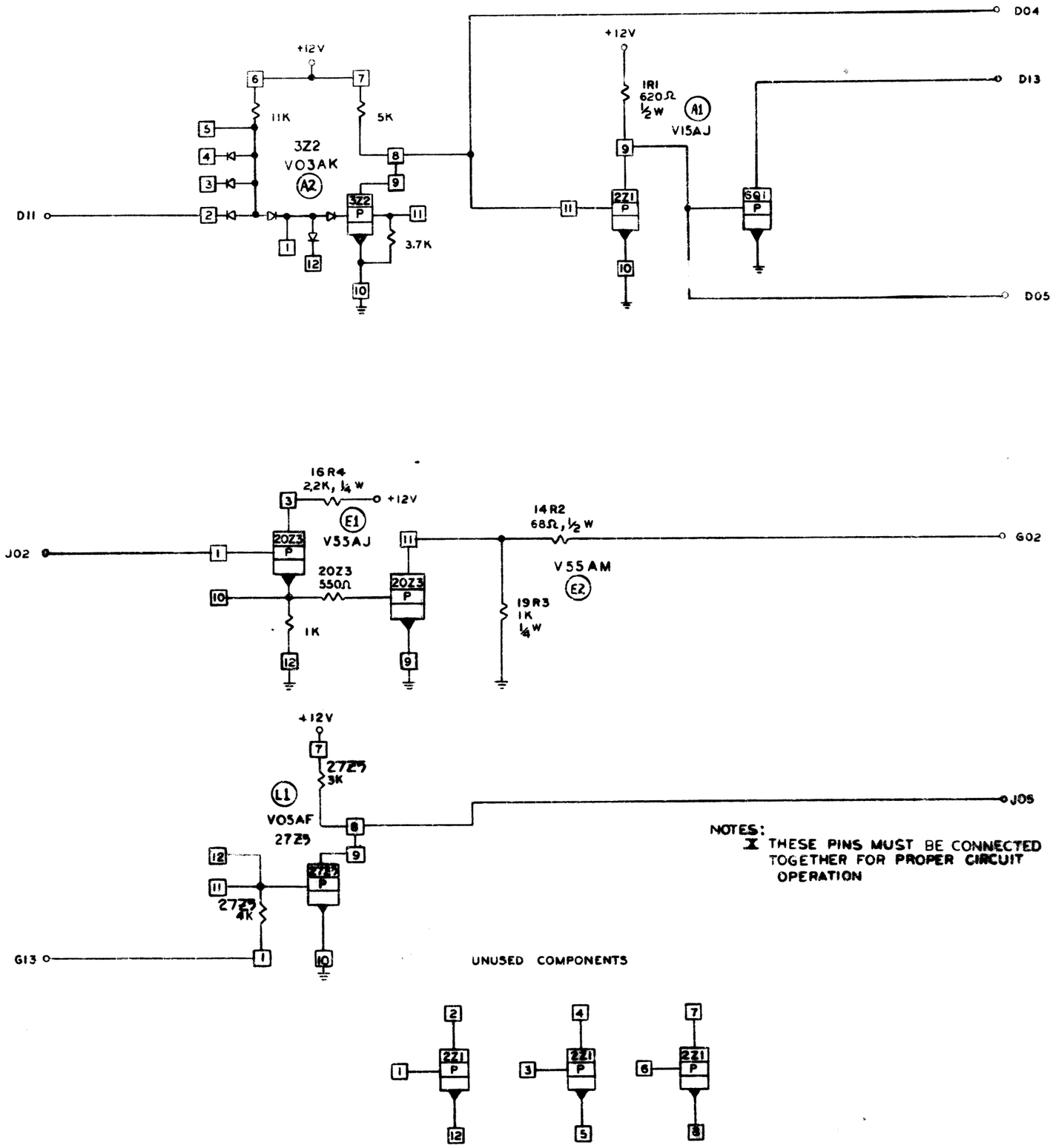

NOTES:
X THESE PINS MUST BE CONNECTED TOGETHER FOR PROPER CIRCUIT OPERATION

CIRCUIT AND PACKAGING STANDARD	
APPROVAL	DATE

INTERNATIONAL BUSINESS MACHINES CORP.	DATE	CHANGE NO.	APPROVAL	DATE	CHANGE NO.	APPROVAL	DEVELOPMENT NO.
NAME CARD 32	5-25-64	DEV 3203					
	7-1-64	DEV 3002					
	3-4-65	162487A					
	9-16-67	171 3798					

5804378

C