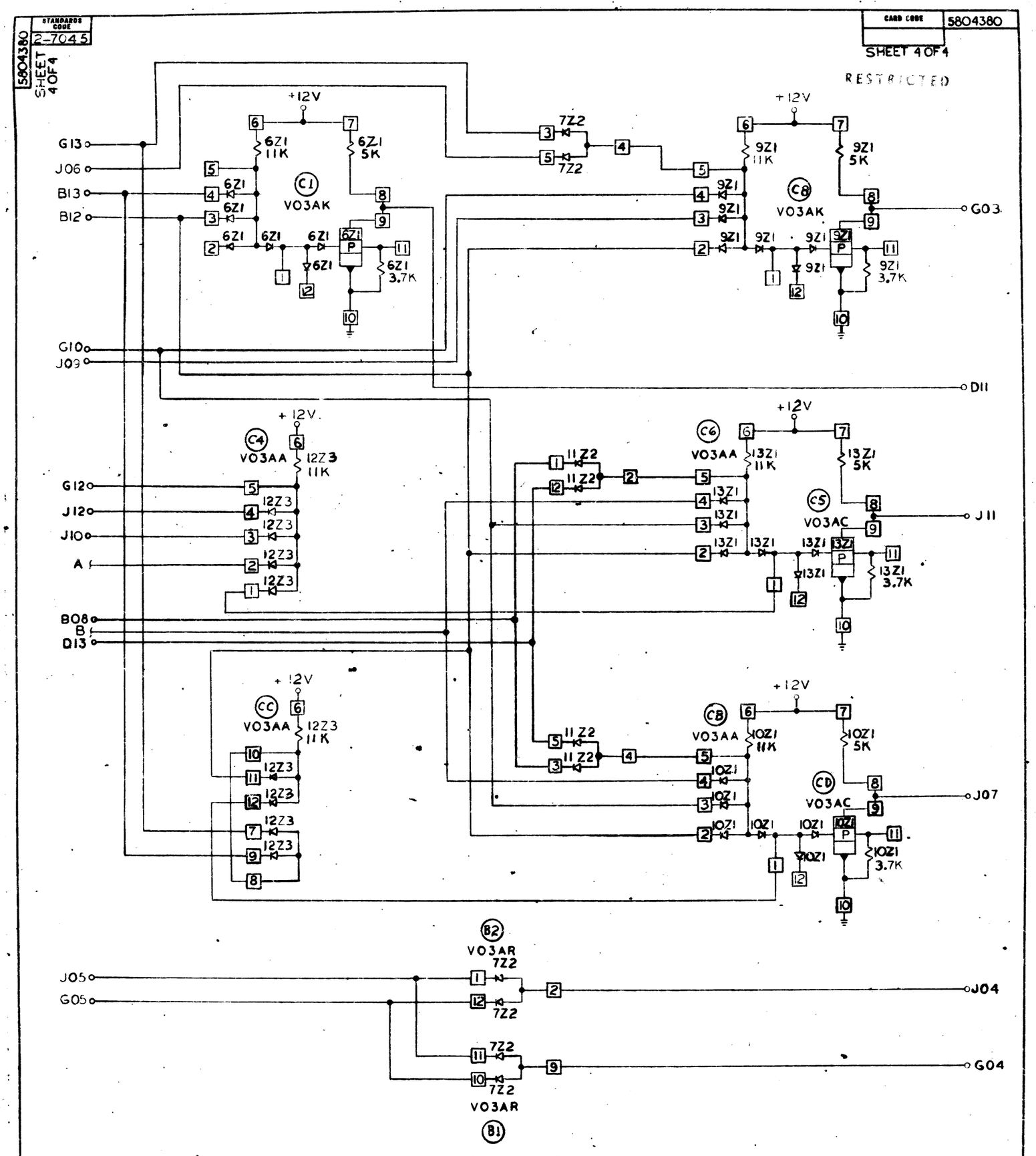
STANDARDS CODE 2-7045
5804380 SHEET 4 OF 4
CARD CODE 5804380
SHEET 4 OF 4
RESTRICTED
+12V
G13
J06
B13
B12
6Z1 11K
6Z1 5K
C1
V03AK
6Z1 3.7K
7Z2
9Z1 11K
9Z1 5K
C8
V03AK
9Z1 3.7K
G03
G10
J09
D11
C4
V03AA
12Z3 11K
G12
J12
J10
A
B08
B
D13
11Z2
C6
V03AA
13Z1 11K
13Z1 5K
C5
V03AC
13Z1 3.7K
J11
CC
V03AA
12Z3 11K
CB
V03AA
10Z1 11K
10Z1 5K
CD
V03AC
10Z1 3.7K
J07
B2
V03AR
J05
G05
J04
G04
B1
UNUSED COMPONENTS
CIRCUIT AND PACKAGING STANDARD
APPROVAL
DATE
INTERNATIONAL BUSINESS MACHINES CORP.
NAME CARD 15
DESIGN LGS 4/27/64
DETAIL LGS 4-27-64
CHECK DLN 5-1-64
APPRO WKF 5-1-64
MODEL
SCALE NONE
DRAW
CHECK
DATE
CHANGE NO.
APPROVAL
DEVELOPMENT NO.
5-22-64 DEV 3281
7-1-64 DEV 3881
2-17-65 162482A
5804380
C
93,271