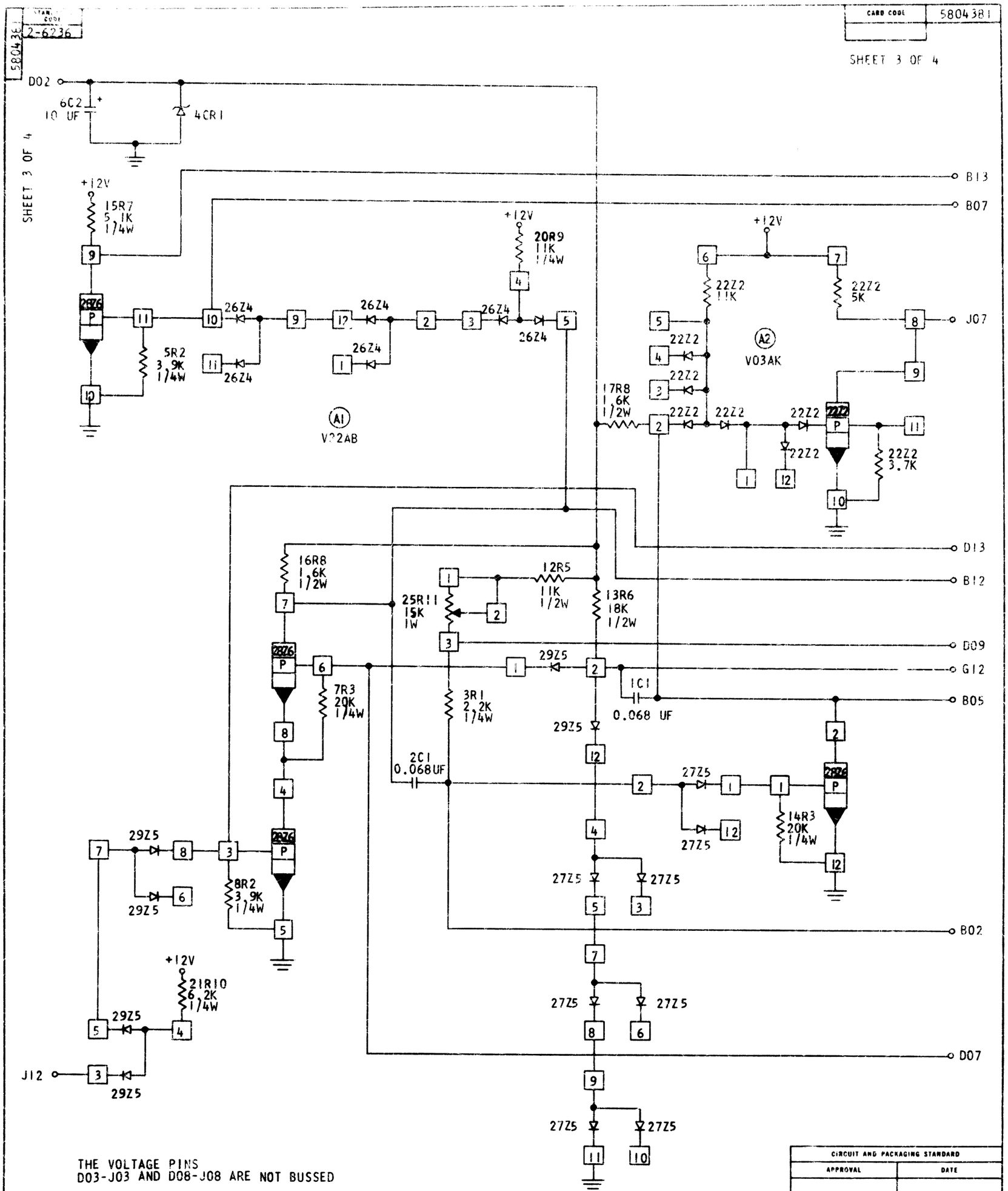
2-6236
5804381
SHEET 3 OF 4
D02
6C2
10 UF
4CR1
+12V
15R7
5.1K
1/4W
B13
B07
20R9
11K
1/4W
26Z4
5R2
3.9K
1/4W
A1
V22AB
22Z2
11K
5K
J07
A2
V03AK
17R8
1.6K
1/2W
3.7K
D13
B12
16R8
1.6K
1/2W
12R5
11K
1/2W
13R6
18K
1/2W
25R11
15K
1W
D09
G12
B05
29Z5
7R3
20K
1/4W
3R1
2.2K
1/4W
1C1
0.068 UF
2C1
0.068UF
27Z5
14R3
20K
1/4W
8R2
3.9K
1/4W
B02
21R10
6.2K
1/4W
J12
D07
THE VOLTAGE PINS
D03-J03 AND D08-J08 ARE NOT BUSSED
CIRCUIT AND PACKAGING STANDARD
APPROVAL
DATE
INTERNATIONAL BUSINESS MACHINES CORP.
NAME CLOCKS - 539 CPS AND 18 KC
DESIGN WSS 5-19-64 MODEL
DETAIL DLN 5-21-64 SCALE NONE
CHECK CNS 5-21-64 DRAW VE 3-18-65
APPRO WKF 5-21-64 CHECK
DATE CHANGE NO. APPROVAL
5-25-64 DEV 3282
3-2-65 160929 A
6-17-65 162518 B
12DEC65 166044 C
21MAR66 166057 D
6APR67 169438 E
15AUG67 171434 F
DEVELOPMENT NO.
5804381
C
267A