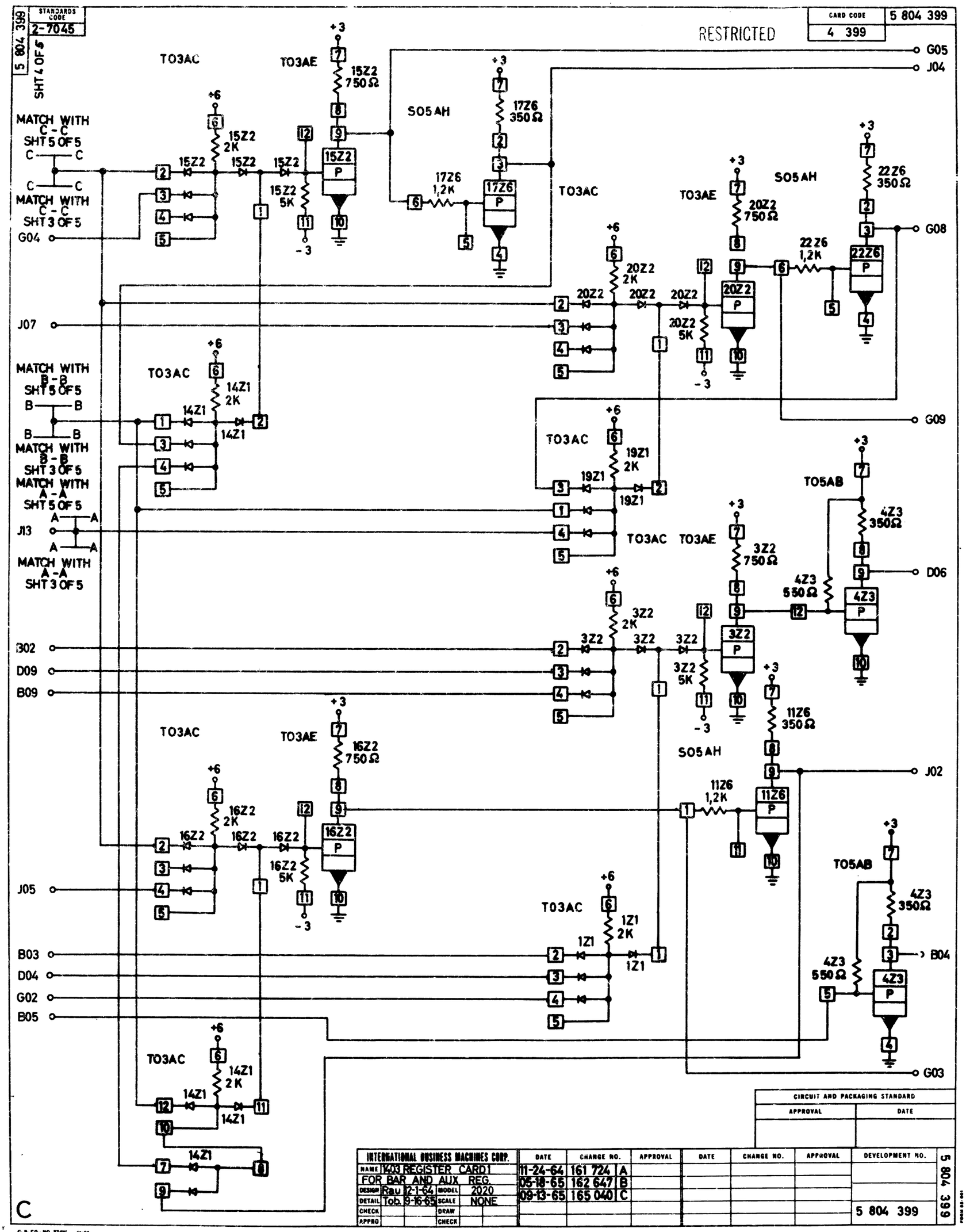
STANDARDS CODE 2-7045
5 804 399
SHT 4 OF 5
RESTRICTED
CARD CODE 4 399
5 804 399
G05
J04
G08
G09
D06
J02
B04
G03
J07
J13
B02
D09
B09
J05
B03
D04
G02
B05
MATCH WITH C-C SHT 5 OF 5
MATCH WITH C-C SHT 3 OF 5
G04
MATCH WITH B-B SHT 5 OF 5
MATCH WITH B-B SHT 3 OF 5
MATCH WITH A-A SHT 5 OF 5
MATCH WITH A-A SHT 3 OF 5
T03AC
T03AE
S05AH
T05AB
15Z2 750Ω
15Z2 2K
15Z2 5K
17Z6 350Ω
17Z6 1,2K
20Z2 750Ω
20Z2 2K
20Z2 5K
22Z6 350Ω
22Z6 1,2K
14Z1 2K
19Z1 2K
3Z2 750Ω
3Z2 2K
3Z2 5K
4Z3 350Ω
4Z3 550Ω
16Z2 750Ω
16Z2 2K
16Z2 5K
11Z6 350Ω
11Z6 1,2K
1Z1 2K
CIRCUIT AND PACKAGING STANDARD
APPROVAL
DATE
INTERNATIONAL BUSINESS MACHINES CORP.
NAME 1403 REGISTER CARD 1
FOR BAR AND AUX REG.
DESIGN Rau 12-1-64
DETAIL Tob. 9-16-65
MODEL 2020
SCALE NONE
CHECK
APPRO
DRAW
CHECK
DATE
CHANGE NO.
APPROVAL
11-24-64 161 724 A
05-18-65 162 647 B
09-13-65 165 040 C
DEVELOPMENT NO.
5 804 399
C