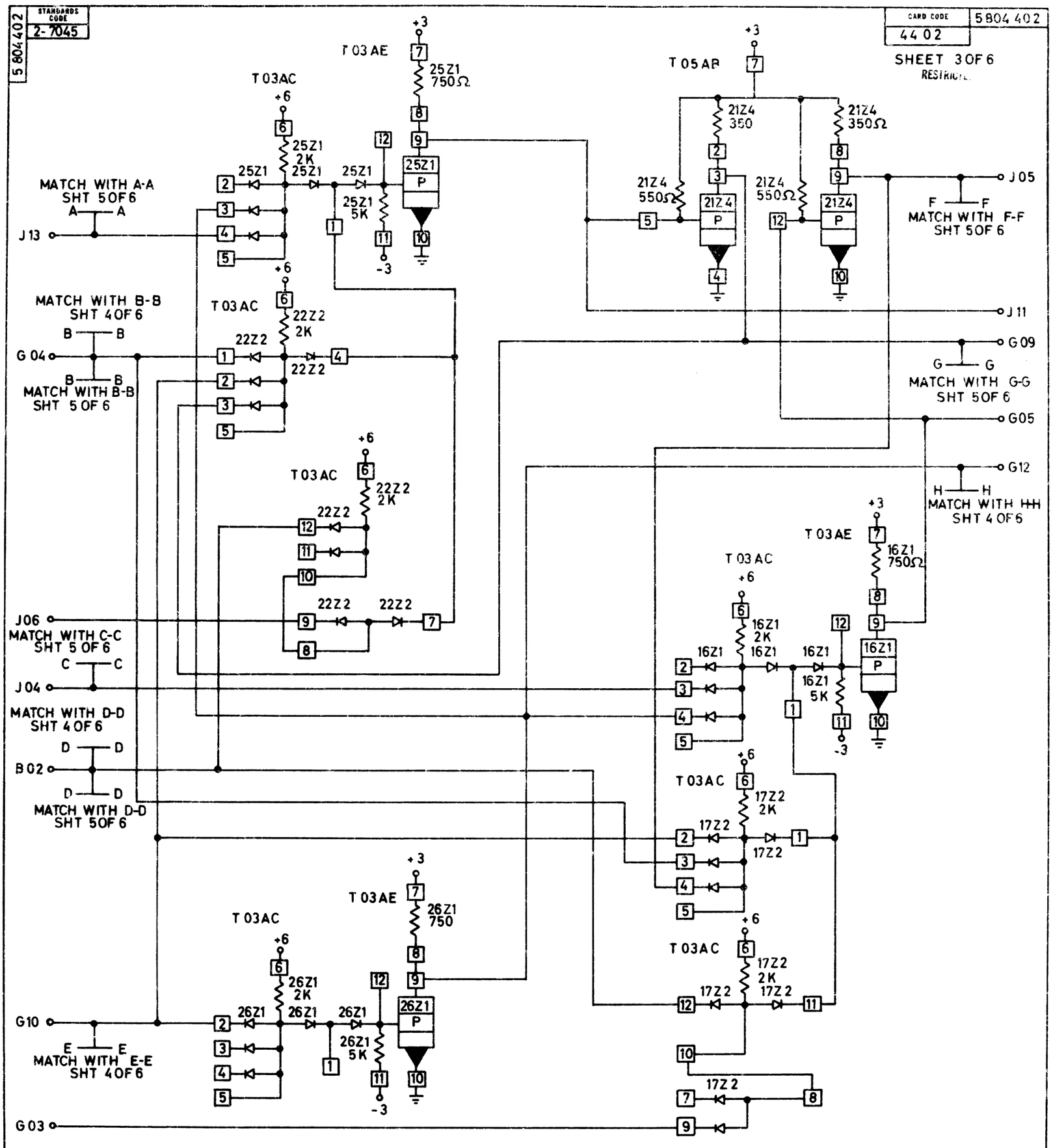


| CIRCUIT AND PACKAGING STANDARD | |
|---|---|
| APPROVAL | DATE |
| | |

| INTERNATIONAL BUSINESS MACHINES CORP. | | | | | | | | | | | | | |
|---|---|---|---|---|---|---|---|---|---|---|---|---|---|
| NAME | REGISTER | | | | DATE | CHANGE NO. | APPROVAL | DATE | CHANGE NO. | APPROVAL | DEVELOPMENT NO. | 5 804 402 |
| DESIGN | THE | 6-4-64 | MODEL | 2020 | 4-17-64 | 160 652 | | | | | | |
| DETAIL | JCL | 6-6-64 | SCALE | NONE | | | | | | | | |
| CHECK | Dept. | 6-12-64 | DRAW | | | | | | | | 5 804 402 | |
| APPRO | | | CHECK | | | | | | | | | |

C

C. B. CO., NO 8746W 4816K

FORM 88 201