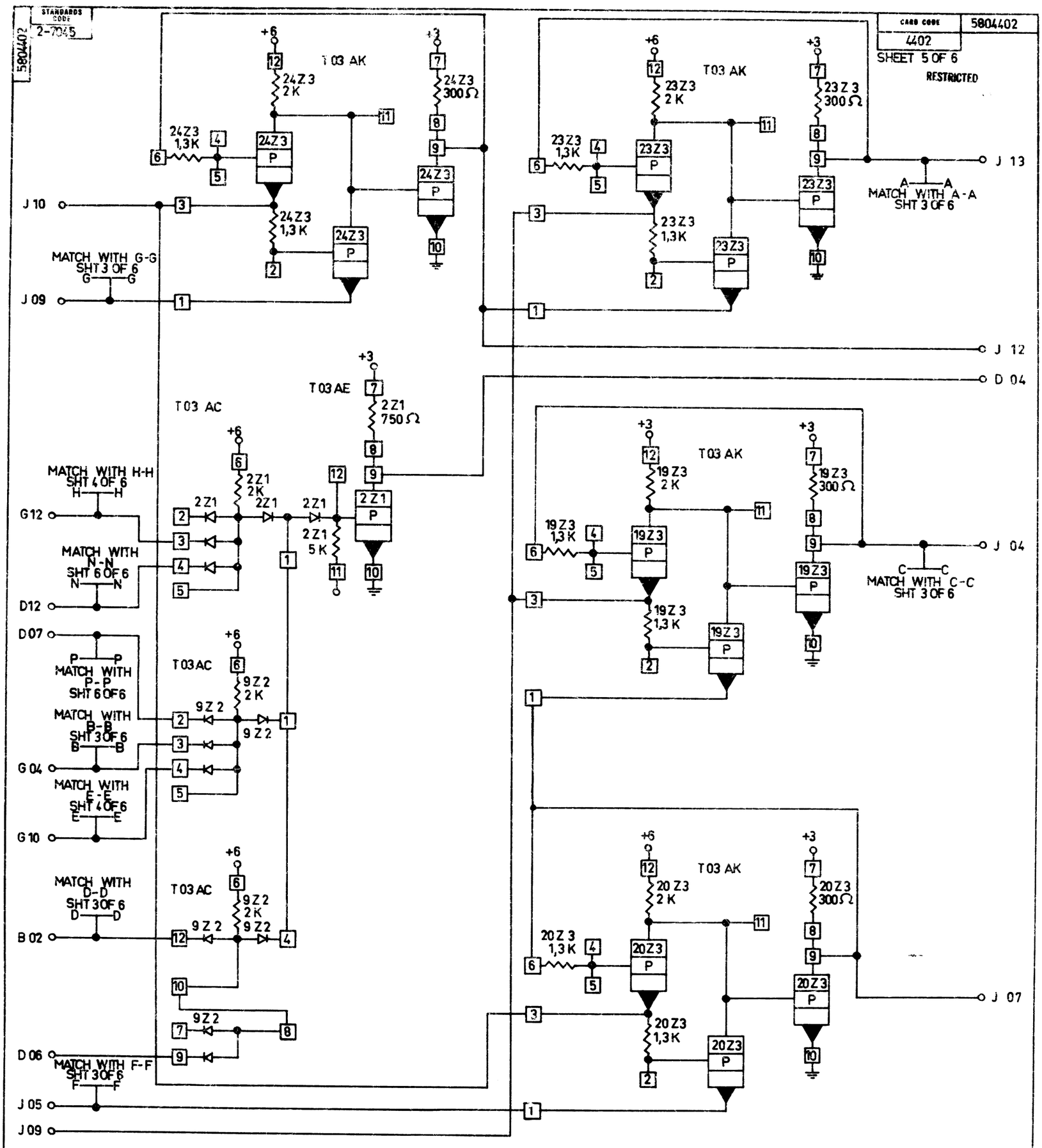
STANDARDS CODE 2-7045
5804402
CARD CODE 5804402
4402
SHEET 5 OF 6
RESTRICTED
T03 AK
24Z3 2K
24Z3 300Ω
24Z3 1,3K
23Z3 2K
23Z3 300Ω
23Z3 1,3K
19Z3 2K
19Z3 300Ω
19Z3 1,3K
20Z3 2K
20Z3 300Ω
20Z3 1,3K
T03 AC
T03 AE
2Z1 750Ω
2Z1 2K
2Z1 5K
9Z2 2K
J 10
J 09
J 13
J 12
D 04
J 04
J 07
G12
D12
D07
G 04
G 10
B 02
D 06
J 05
J 09
MATCH WITH G-G SHT 3 OF 6
MATCH WITH H-H SHT 4 OF 6
MATCH WITH N-N SHT 6 OF 6
MATCH WITH P-P SHT 6 OF 6
MATCH WITH B-B SHT 3 OF 6
MATCH WITH E-E SHT 4 OF 6
MATCH WITH D-D SHT 3 OF 6
MATCH WITH F-F SHT 3 OF 6
MATCH WITH A-A SHT 3 OF 6
MATCH WITH C-C SHT 3 OF 6
5 A1 0,68 µF
18 A1 0,68 µF
CIRCUIT AND PACKAGING STANDARD
APPROVAL
DATE
INTERNATIONAL BUSINESS MACHINES CORP.
NAME REGISTER
DESIGN THE 6-6-64
DETAIL No. 6-6-64
CHECK Dept. 6-12-64
APPRO
MODEL 2020
SCALE NONE
DRAW
CHECK
DATE 4-17-64
CHANGE NO. 160652
DEVELOPMENT NO.
5804402
C