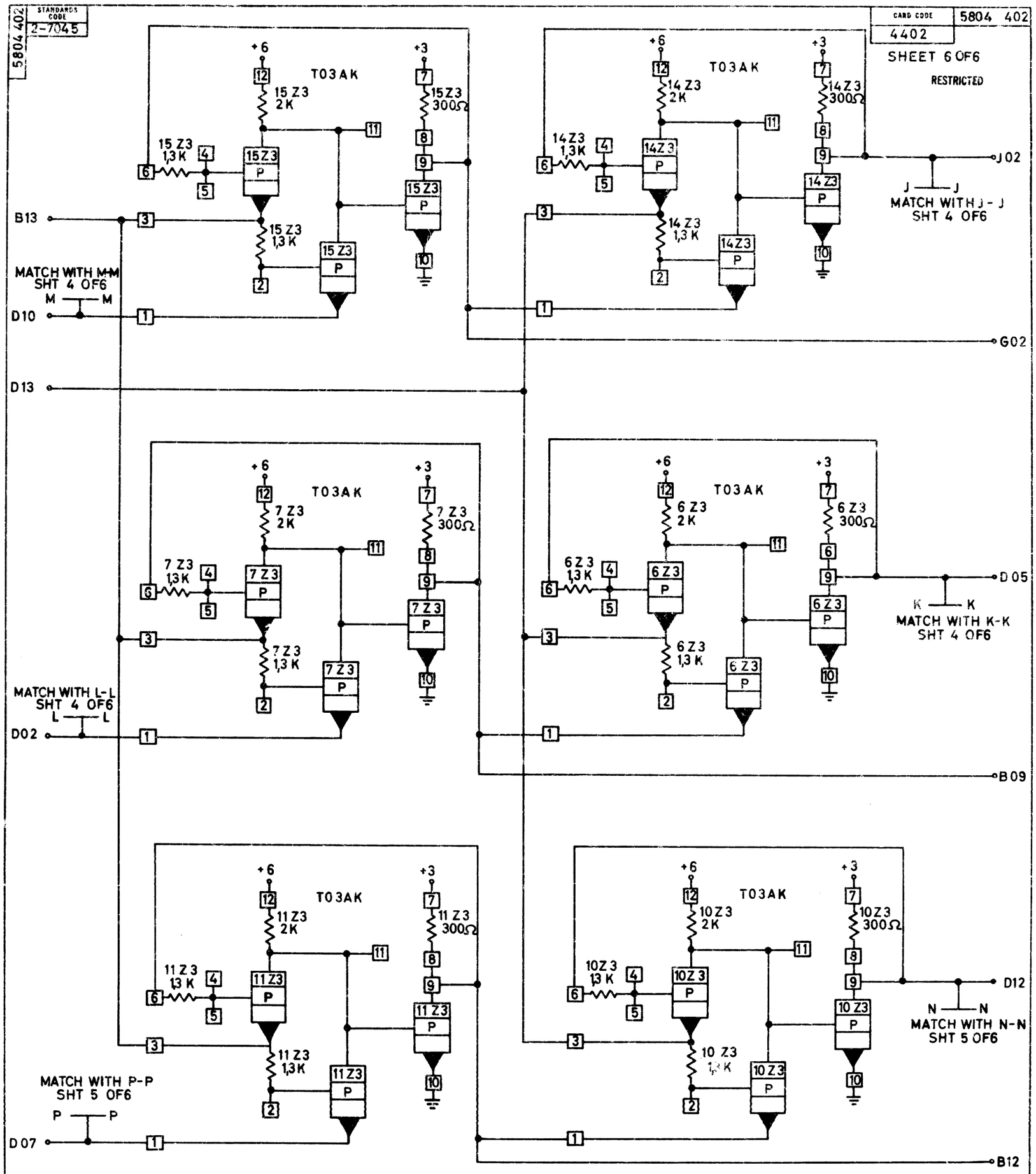

CIRCUIT AND PACKAGING STANDARD	
APPROVAL	DATE

INTERNATIONAL BUSINESS MACHINES CORP.												
NAME	REGISTER				DATE	CHANGE NO.	APPROVAL	DATE	CHANGE NO.	APPROVAL	DEVELOPMENT NO.	5804 402
DESIGN	THE 6-4-64	MODEL	2020		4-17-64	160652						
DETAIL	NG 6-6-64	SCALE	NONE									
CHECK	Dept 6-12-64	DRAW									5840 402	
APPRO		CHECK										

C

C. S. CO., NO 57-017 48104