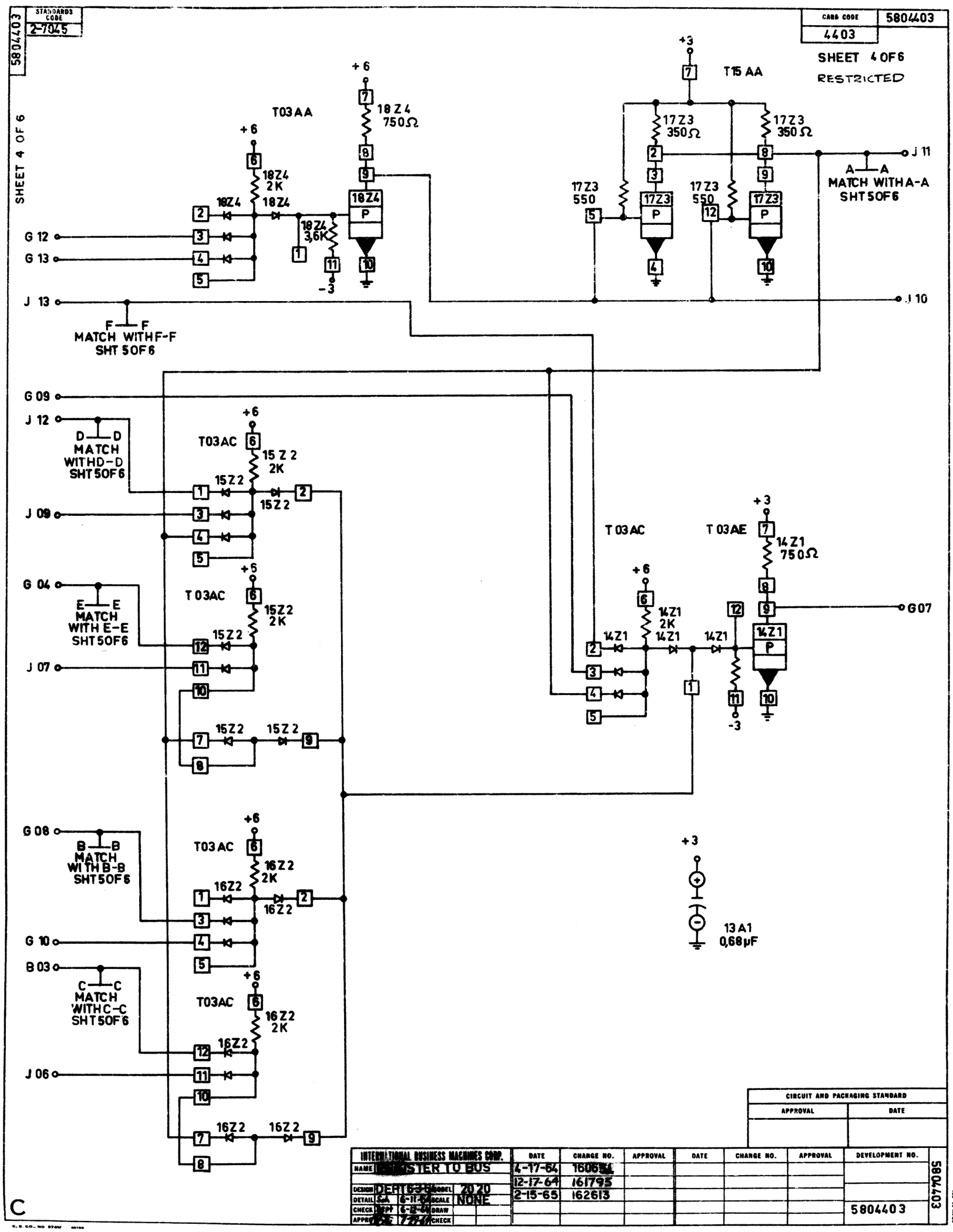
5804403
STANDARDS CODE
2-7045
CARD CODE
4403
5804403
SHEET 4 OF 6
RESTRICTED
SHEET 4 OF 6
T03AA
+6
18Z4
2K
18Z4
18Z4
18Z4
3,6K
-3
18Z4
750Ω
P
G 12
G 13
J 13
F—F
MATCH WITH F-F
SHT 5 OF 6
+3
T15 AA
17Z3
350Ω
17Z3
550
17Z3
P
J 11
A—A
MATCH WITH A-A
SHT 5 OF 6
J 10
G 09
J 12
D—D
MATCH
WITH D-D
SHT 5 OF 6
J 09
T03AC
15Z2
2K
G 04
E—E
MATCH
WITH E-E
SHT 5 OF 6
J 07
G 08
B—B
MATCH
WITH B-B
SHT 5 OF 6
16Z2
2K
G 10
B 03
C—C
MATCH
WITH C-C
SHT 5 OF 6
J 06
T03AE
14Z1
750Ω
14Z1
2K
14Z1
P
G07
13A1
0,68μF
CIRCUIT AND PACKAGING STANDARD
APPROVAL
DATE
INTERNATIONAL BUSINESS MACHINES CORP.
NAME
[redacted]STER TO BUS
DESIGN
DETAIL
CHECK
APPR
MODEL
2070
SCALE
NONE
DRAW
CHECK
DATE
CHANGE NO.
APPROVAL
4-17-64
160[redacted]
12-17-64
161795
2-15-65
162613
DEVELOPMENT NO.
5804403
5804403
C