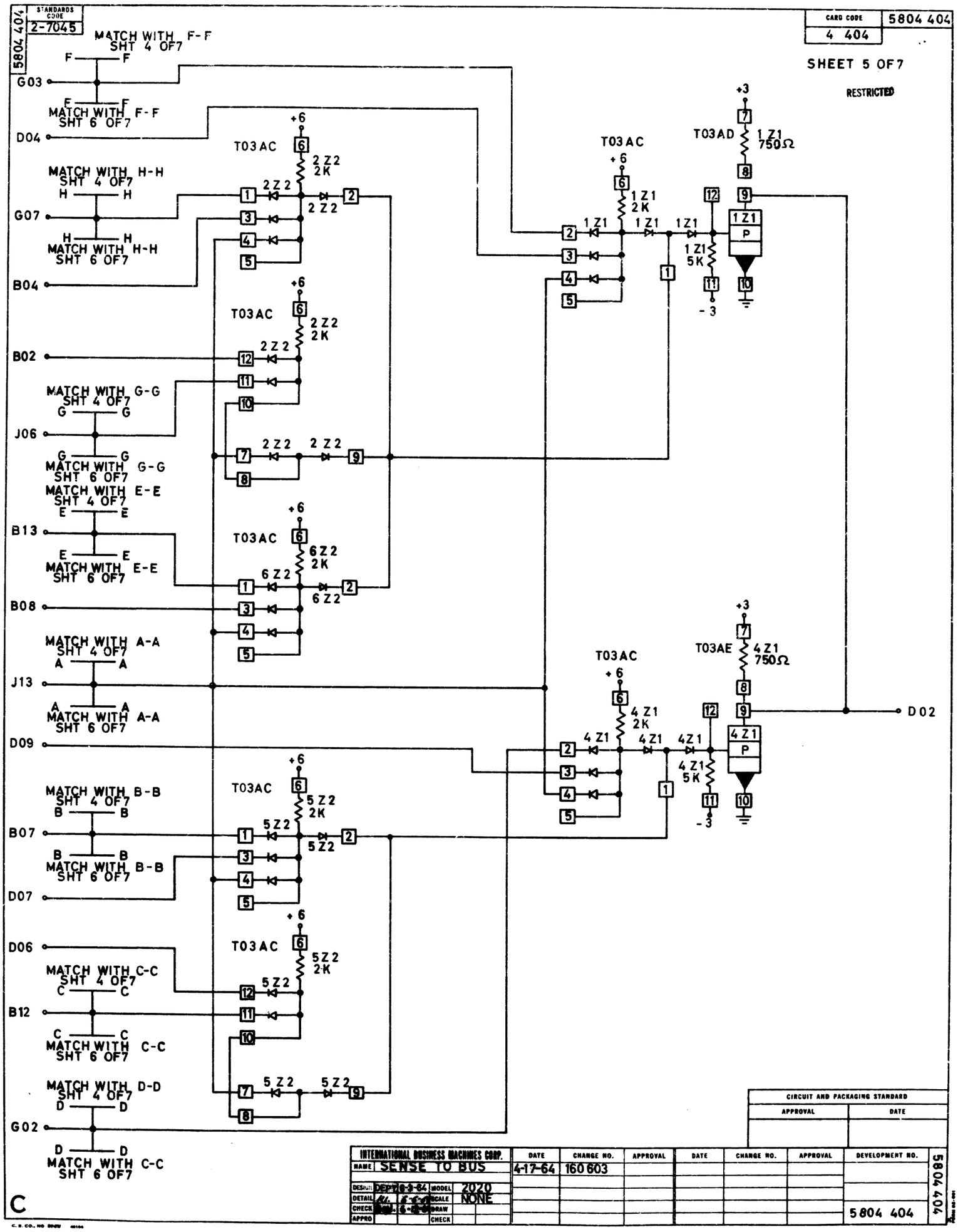
5804 404
STANDARDS CODE
2-7045
CARD CODE
4 404
5804 404
SHEET 5 OF7
RESTRICTED
MATCH WITH F-F SHT 4 OF7
MATCH WITH F-F SHT 6 OF7
MATCH WITH H-H SHT 4 OF7
MATCH WITH H-H SHT 6 OF7
MATCH WITH G-G SHT 4 OF7
MATCH WITH G-G SHT 6 OF7
MATCH WITH E-E SHT 4 OF7
MATCH WITH E-E SHT 6 OF7
MATCH WITH A-A SHT 4 OF7
MATCH WITH A-A SHT 6 OF7
MATCH WITH B-B SHT 4 OF7
MATCH WITH B-B SHT 6 OF7
MATCH WITH C-C SHT 4 OF7
MATCH WITH C-C SHT 6 OF7
MATCH WITH D-D SHT 4 OF7
MATCH WITH C-C SHT 6 OF7
G03
D04
G07
B04
B02
J06
B13
B08
J13
D09
B07
D07
D06
B12
G02
T03AC
T03AD
T03AE
2 Z2 2K
6 Z2 2K
5 Z2 2K
1 Z1 2K
4 Z1 2K
1 Z1 5K
4 Z1 5K
1 Z1 750Ω
4 Z1 750Ω
+6
+3
-3
D02
C
CIRCUIT AND PACKAGING STANDARD
APPROVAL
DATE
INTERNATIONAL BUSINESS MACHINES CORP.
NAME SENSE TO BUS
DESIGN
DETAIL
CHECK
APPRO
MODEL 2020
SCALE NONE
DRAW
CHECK
DATE 4-17-64
CHANGE NO. 160 603
APPROVAL
DATE
CHANGE NO.
APPROVAL
DEVELOPMENT NO.
5804 404
5804 404