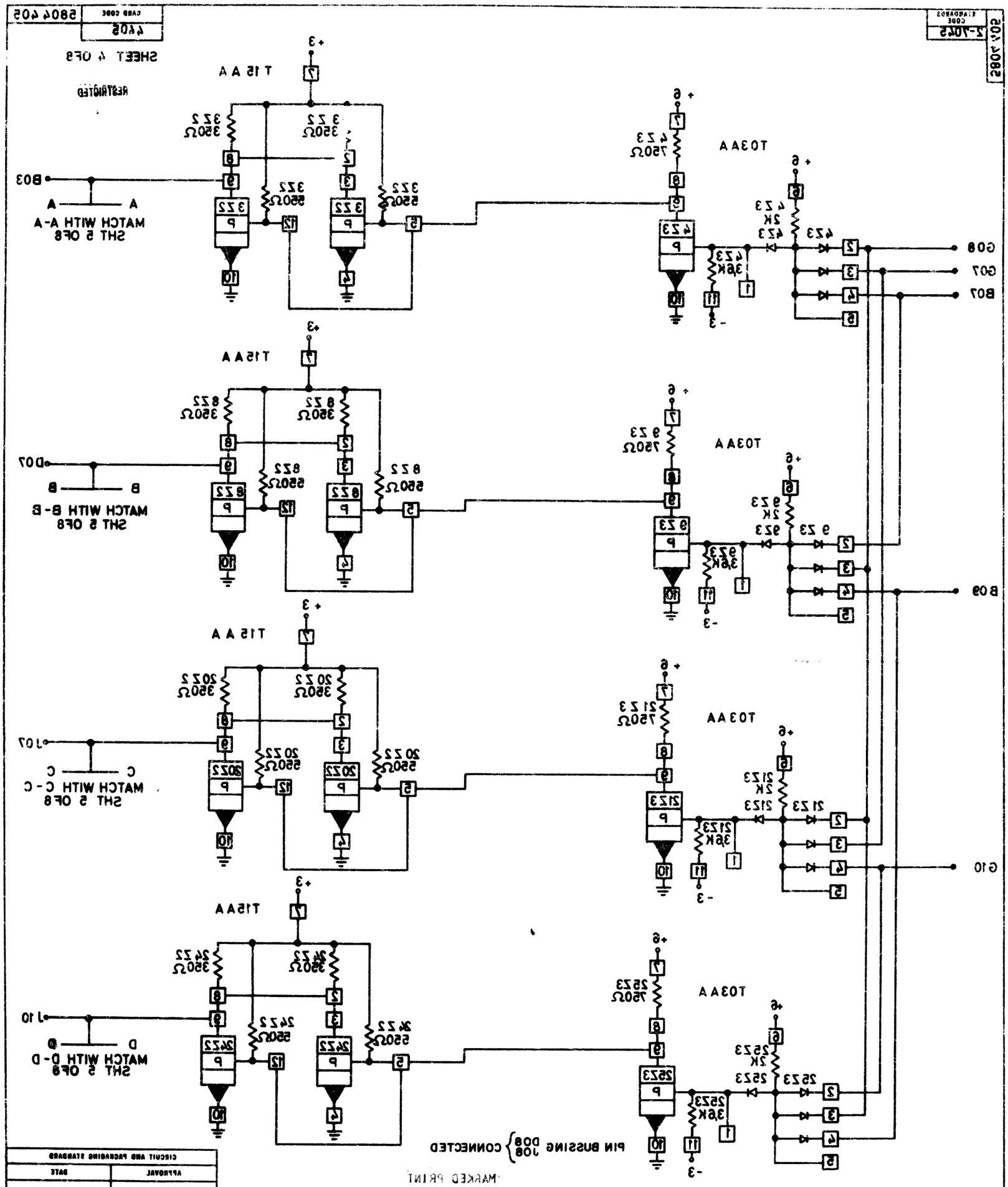
T15AA
T03AA
MATCH WITH A-A
SHT 5 OF8
MATCH WITH B-B
SHT 5 OF8
MATCH WITH C-C
SHT 5 OF8
MATCH WITH D-D
SHT 5 OF8
PIN BUSSING 108 } CONNECTED
G08
G07
B07
B09
G10
B03
D07
C07
D10
SHEET 4 OF8
RESTRICTED
5804 405
4405
CIRCUIT AND PACKAGING STANDARD
APPROVAL
DATE
INTERNATIONAL BUSINESS MACHINES CORP.
BUS
20 20
NONE
4-17-64
160 604
160022
5804 405
DEVELOPMENT NO.
CHANGE NO.
APPROVAL
DATE
MARKED PRINT
(FILE IN PLACE OF FC 16064)