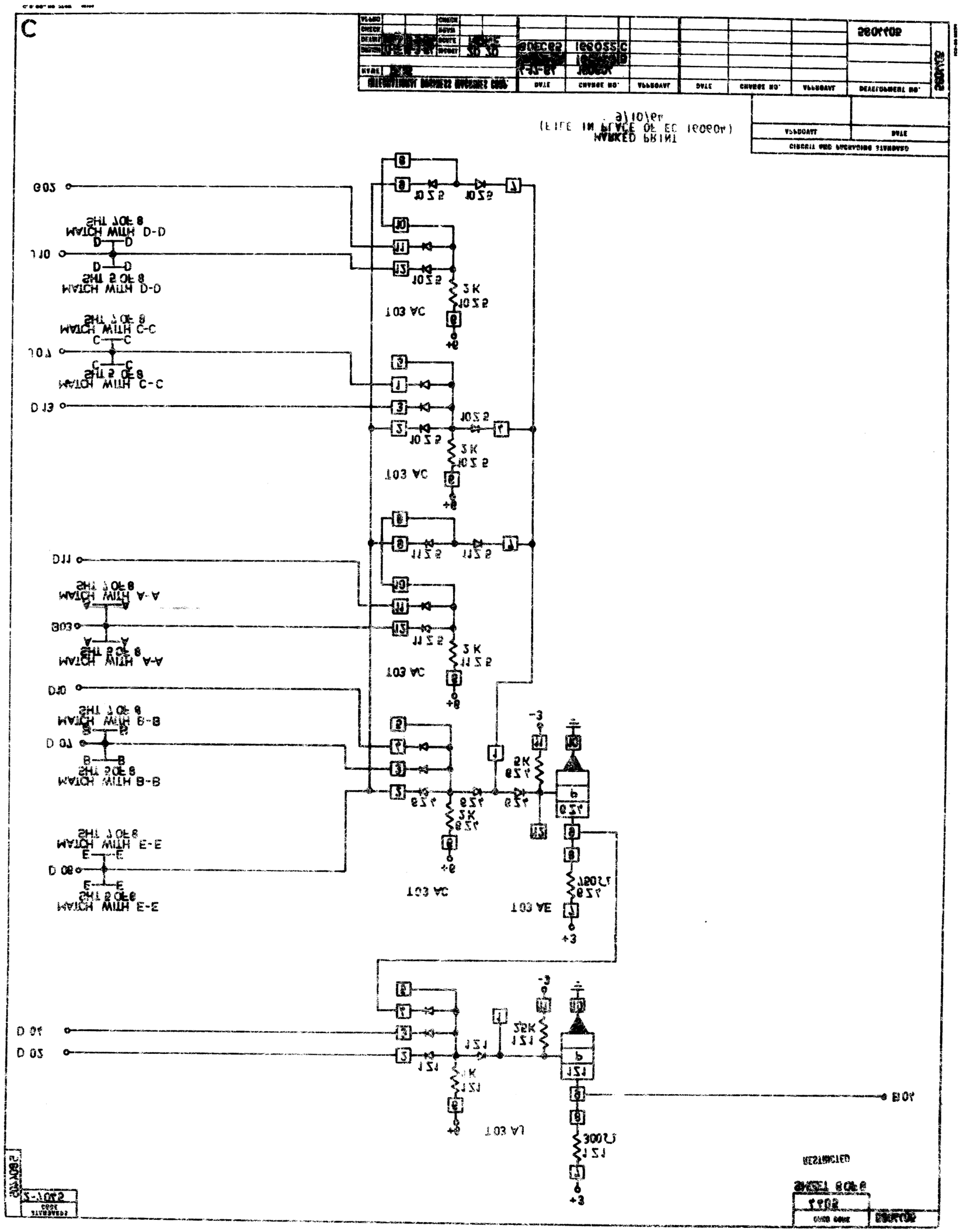
C
MATCH WITH D-D
MATCH WITH C-C
MATCH WITH A-A
MATCH WITH B-B
MATCH WITH E-E
3K
2K
+3
-3