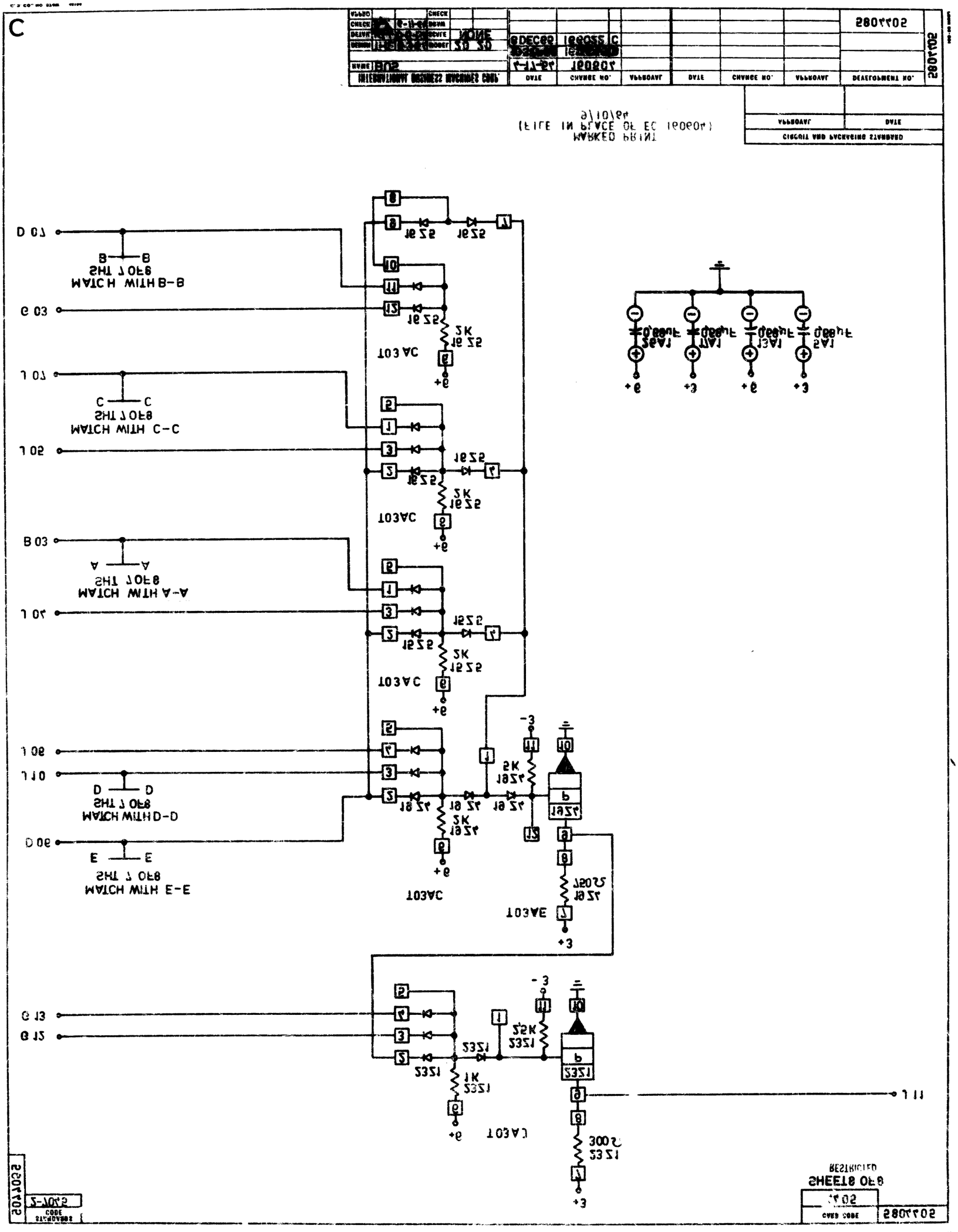
C
WATCH WITH A-A
WATCH WITH B-B
WATCH WITH C-C
WATCH WITH D-D
WATCH WITH E-E
AC01
BC01
CC01
DC01
EC01
FC01
GC01
HC01
IC01
JC01
KC01
LC01
MC01
NC01
OC01
PC01
QC01
RC01
SC01
TC01
UC01
VC01
WC01
XC01
YC01
ZC01
AA01
AB01
AC01
AD01
AE01
AF01
AG01
AH01
AJ01
AK01
AL01
AM01
AN01
AP01
AQ01
AR01
AS01
AT01
AU01
AV01
AW01
AX01
AY01
AZ01
BA01
BB01
BC01
BD01
BE01
BF01
BG01
BH01
BJ01
BK01
BL01
BM01
BN01
BP01
BQ01
BR01
BS01
BT01
BU01
BV01
BW01
BX01
BY01
BZ01
CA01
CB01
CC01
CD01
CE01
CF01
CG01
CH01
CJ01
CK01
CL01
CM01
CN01
CP01
CQ01
CR01
CS01
CT01
CU01
CV01
CW01
CX01
CY01
CZ01
DA01
DB01
DC01
DD01
DE01
DF01
DG01
DH01
DJ01
DK01
DL01
DM01
DN01
DP01
DQ01
DR01
DS01
DT01
DU01
DV01
DW01
DX01
DY01
DZ01
EA01
EB01
EC01
ED01
EE01
EF01
EG01
EH01
EJ01
EK01
EL01
EM01
EN01
EP01
EQ01
ER01
ES01
ET01
EU01
EV01
EW01
EX01
EY01
EZ01
FA01
FB01
FC01
FD01
FE01
FF01
FG01
FH01
FJ01
FK01
FL01
FM01
FN01
FP01
FQ01
FR01
FS01
FT01
FU01
FV01
FW01
FX01
FY01
FZ01
GA01
GB01
GC01
GD01
GE01
GF01
GG01
GH01
GJ01
GK01
GL01
GM01
GN01
GP01
GQ01
GR01
GS01
GT01
GU01
GV01
GW01
GX01
GY01
GZ01
HA01
HB01
HC01
HD01
HE01
HF01
HG01
HH01
HJ01
HK01
HL01
HM01
HN01
HP01
HQ01
HR01
HS01
HT01
HU01
HV01
HW01
HX01
HY01
HZ01
JA01
JB01
JC01
JD01
JE01
JF01
JG01
JH01
JJ01
JK01
JL01
JM01
JN01
JP01
JQ01
JR01
JS01
JT01
JU01
JV01
JW01
JX01
JY01
JZ01
KA01
KB01
KC01
KD01
KE01
KF01
KG01
KH01
KJ01
KK01
KL01
KM01
KN01
KP01
KQ01
KR01
KS01
KT01
KU01
KV01
KW01
KX01
KY01
KZ01
LA01
LB01
LC01
LD01
LE01
LF01
LG01
LH01
LJ01
LK01
LL01
LM01
LN01
LP01
LQ01
LR01
LS01
LT01
LU01
LV01
LW01
LX01
LY01
LZ01
MA01
MB01
MC01
MD01
ME01
MF01
MG01
MH01
MJ01
MK01
ML01
MM01
MN01
MP01
MQ01
MR01
MS01
MT01
MU01
MV01
MW01
MX01
MY01
MZ01
NA01
NB01
NC01
ND01
NE01
NF01
NG01
NH01
NJ01
NK01
NL01
NM01
NN01
NP01
NQ01
NR01
NS01
NT01
NU01
NV01
NW01
NX01
NY01
NZ01
PA01
PB01
PC01
PD01
PE01
PF01
PG01
PH01
PJ01
PK01
PL01
PM01
PN01
PP01
PQ01
PR01
PS01
PT01
PU01
PV01
PW01
PX01
PY01
PZ01
QA01
QB01
QC01
QD01
QE01
QF01
QG01
QH01
QJ01
QK01
QL01
QM01
QN01
QP01
QQ01
QR01
QS01
QT01
QU01
QV01
QW01
QX01
QY01
QZ01
RA01
RB01
RC01
RD01
RE01
RF01
RG01
RH01
RJ01
RK01
RL01
RM01
RN01
RP01
RQ01
RR01
RS01
RT01
RU01
RV01
RW01
RX01
RY01
RZ01
SA01
SB01
SC01
SD01
SE01
SF01
SG01
SH01
SJ01
SK01
SL01
SM01
SN01
SP01
SQ01
SR01
SS01
ST01
SU01
SV01
SW01
SX01
SY01
SZ01
TA01
TB01
TC01
TD01
TE01
TF01
TG01
TH01
TJ01
TK01
TL01
TM01
TN01
TP01
TQ01
TR01
TS01
TT01
TU01
TV01
TW01
TX01
TY01
TZ01
UA01
UB01
UC01
UD01
UE01
UF01
UG01
UH01
UJ01
UK01
UL01
UM01
UN01
UP01
UQ01
UR01
US01
UT01
UU01
UV01
UW01
UX01
UY01
UZ01
VA01
VB01
VC01
VD01
VE01
VF01
VG01
VH01
VJ01
VK01
VL01
VM01
VN01
VP01
VQ01
VR01
VS01
VT01
VU01
VV01
VW01
VX01
VY01
VZ01
WA01
WB01
WC01
WD01
WE01
WF01
WG01
WH01
WJ01
WK01
WL01
WM01
WN01
WP01
WQ01
WR01
WS01
WT01
WU01
WV01
WW01
WX01
WY01
WZ01
XA01
XB01
XC01
XD01
XE01
XF01
XG01
XH01
XJ01
XK01
XL01
XM01
XN01
XP01
XQ01
XR01
XS01
XT01
XU01
XV01
XW01
XX01
XY01
XZ01
YA01
YB01
YC01
YD01
YE01
YF01
YG01
YH01
YJ01
YK01
YL01
YM01
YN01
YP01
YQ01
YR01
YS01
YT01
YU01
YV01
YW01
YX01
YY01
YZ01
ZA01
ZB01
ZC01
ZD01
ZE01
ZF01
ZG01
ZH01
ZJ01
ZK01
ZL01
ZM01
ZN01
ZP01
ZQ01
ZR01
ZS01
ZT01
ZU01
ZV01
ZW01
ZX01
ZY01
ZZ01
AA02
AB02
AC02
AD02
AE02
AF02
AG02
AH02
AJ02
AK02
AL02
AM02
AN02
AP02
AQ02
AR02
AS02
AT02
AU02
AV02
AW02
AX02
AY02
AZ02
BA02
BB02
BC02
BD02
BE02
BF02
BG02
BH02
BJ02
BK02
BL02
BM02
BN02
BP02
BQ02
BR02
BS02
BT02
BU02
BV02
BW02
BX02
BY02
BZ02
CA02
CB02
CC02
CD02
CE02
CF02
CG02
CH02
CJ02
CK02
CL02
CM02
CN02
CP02
CQ02
CR02
CS02
CT02
CU02
CV02
CW02
CX02
CY02
CZ02
DA02
DB02
DC02
DD02
DE02
DF02
DG02
DH02
DJ02
DK02
DL02
DM02
DN02
DP02
DQ02
DR02
DS02
DT02
DU02
DV02
DW02
DX02
DY02
DZ02
EA02
EB02
EC02
ED02
EE02
EF02
EG02
EH02
EJ02
EK02
EL02
EM02
EN02
EP02
EQ02
ER02
ES02
ET02
EU02
EV02
EW02
EX02
EY02
EZ02
FA02
FB02
FC02
FD02
FE02
FF02
FG02
FH02
FJ02
FK02
FL02
FM02
FN02
FP02
FQ02
FR02
FS02
FT02
FU02
FV02
FW02
FX02
FY02
FZ02
GA02
GB02
GC02
GD02
GE02
GF02
GG02
GH02
GJ02
GK02
GL02
GM02
GN02
GP02
GQ02
GR02
GS02
GT02
GU02
GV02
GW02
GX02
GY02
GZ02
HA02
HB02
HC02
HD02
HE02
HF02
HG02
HH02
HJ02
HK02
HL02
HM02
HN02
HP02
HQ02
HR02
HS02
HT02
HU02
HV02
HW02
HX02
HY02
HZ02
JA02
JB02
JC02
JD02
JE02
JF02
JG02
JH02
JJ02
JK02
JL02
JM02
JN02
JP02
JQ02
JR02
JS02
JT02
JU02
JV02
JW02
JX02
JY02
JZ02
KA02
KB02
KC02
KD02
KE02
KF02
KG02
KH02
KJ02
KK02
KL02
KM02
KN02
KP02
KQ02
KR02
KS02
KT02
KU02
KV02
KW02
KX02
KY02
KZ02
LA02
LB02
LC02
LD02
LE02
LF02
LG02
LH02
LJ02
LK02
LL02
LM02
LN02
LP02
LQ02
LR02
LS02
LT02
LU02
LV02
LW02
LX02
LY02
LZ02
MA02
MB02
MC02
MD02
ME02
MF02
MG02
MH02
MJ02
MK02
ML02
MM02
MN02
MP02
MQ02
MR02
MS02
MT02
MU02
MV02
MW02
MX02
MY02
MZ02
NA02
NB02
NC02
ND02
NE02
NF02
NG02
NH02
NJ02
NK02
NL02
NM02
NN02
NP02
NQ02
NR02
NS02
NT02
NU02
NV02
NW02
NX02
NY02
NZ02
PA02
PB02
PC02
PD02
PE02
PF02
PG02
PH02
PJ02
PK02
PL02
PM02
PN02
PP02
PQ02
PR02
PS02
PT02
PU02
PV02
PW02
PX02
PY02
PZ02
QA02
QB02
QC02
QD02
QE02
QF02
QG02
QH02
QJ02
QK02
QL02
QM02
QN02
QP02
QQ02
QR02
QS02
QT02
QU02
QV02
QW02
QX02
QY02
QZ02
RA02
RB02
RC02
RD02
RE02
RF02
RG02
RH02
RJ02
RK02
RL02
RM02
RN02
RP02
RQ02
RR02
RS02
RT02
RU02
RV02
RW02
RX02
RY02
RZ02
SA02
SB02
SC02
SD02
SE02
SF02
SG02
SH02
SJ02
SK02
SL02
SM02
SN02
SP02
SQ02
SR02
SS02
ST02
SU02
SV02
SW02
SX02
SY02
SZ02
TA02
TB02
TC02
TD02
TE02
TF02
TG02
TH02
TJ02
TK02
TL02
TM02
TN02
TP02
TQ02
TR02
TS02
TT02
TU02
TV02
TW02
TX02
TY02
TZ02
UA02
UB02
UC02
UD02
UE02
UF02
UG02
UH02
UJ02
UK02
UL02
UM02
UN02
UP02
UQ02
UR02
US02
UT02
UU02
UV02
UW02
UX02
UY02
UZ02
VA02
VB02
VC02
VD02
VE02
VF02
VG02
VH02
VJ02
VK02
VL02
VM02
VN02
VP02
VQ02
VR02
VS02
VT02
VU02
VV02
VW02
VX02
VY02
VZ02
WA02
WB02
WC02
WD02
WE02
WF02
WG02
WH02
WJ02
WK02
WL02
WM02
WN02
WP02
WQ02
WR02
WS02
WT02
WU02
WV02
WW02
WX02
WY02
WZ02
XA02
XB02
XC02
XD02
XE02
XF02
XG02
XH02
XJ02
XK02
XL02
XM02
XN02
XP02
XQ02
XR02
XS02
XT02
XU02
XV02
XW02
XX02
XY02
XZ02
YA02
YB02
YC02
YD02
YE02
YF02
YG02
YH02
YJ02
YK02
YL02
YM02
YN02
YP02
YQ02
YR02
YS02
YT02
YU02
YV02
YW02
YX02
YY02
YZ02
ZA02
ZB02
ZC02
ZD02
ZE02
ZF02
ZG02
ZH02
ZJ02
ZK02
ZL02
ZM02
ZN02
ZP02
ZQ02
ZR02
ZS02
ZT02
ZU02
ZV02
ZW02
ZX02
ZY02
ZZ02
AA03
AB03
AC03
AD03
AE03
AF03
AG03
AH03
AJ03
AK03
AL03
AM03
AN03
AP03
AQ03
AR03
AS03
AT03
AU03
AV03
AW03
AX03
AY03
AZ03
BA03
BB03
BC03
BD03
BE03
BF03
BG03
BH03
BJ03
BK03
BL03
BM03
BN03
BP03
BQ03
BR03
BS03
BT03
BU03
BV03
BW03
BX03
BY03
BZ03
CA03
CB03
CC03
CD03
CE03
CF03
CG03
CH03
CJ03
CK03
CL03
CM03
CN03
CP03
CQ03
CR03
CS03
CT03
CU03
CV03
CW03
CX03
CY03
CZ03
DA03
DB03
DC03
DD03
DE03
DF03
DG03
DH03
DJ03
DK03
DL03
DM03
DN03
DP03
DQ03
DR03
DS03
DT03
DU03
DV03
DW03
DX03
DY03
DZ03
EA03
EB03
EC03
ED03
EE03
EF03
EG03
EH03
EJ03
EK03
EL03
EM03
EN03
EP03
EQ03
ER03
ES03
ET03
EU03
EV03
EW03
EX03
EY03
EZ03
FA03
FB03
FC03
FD03
FE03
FF03
FG03
FH03
FJ03
FK03
FL03
FM03
FN03
FP03
FQ03
FR03
FS03
FT03
FU03
FV03
FW03
FX03
FY03
FZ03
GA03
GB03
GC03
GD03
GE03
GF03
GG03
GH03
GJ03
GK03
GL03
GM03
GN03
GP03
GQ03
GR03
GS03
GT03
GU03
GV03
GW03
GX03
GY03
GZ03
HA03
HB03
HC03
HD03
HE03
HF03
HG03
HH03
HJ03
HK03
HL03
HM03
HN03
HP03
HQ03
HR03
HS03
HT03
HU03
HV03
HW03
HX03
HY03
HZ03
JA03
JB03
JC03
JD03
JE03
JF03
JG03
JH03
JJ03
JK03
JL03
JM03
JN03
JP03
JQ03
JR03
JS03
JT03
JU03
JV03
JW03
JX03
JY03
JZ03
KA03
KB03
KC03
KD03
KE03
KF03
KG03
KH03
KJ03
KK03
KL03
KM03
KN03
KP03
KQ03
KR03
KS03
KT03
KU03
KV03
KW03
KX03
KY03
KZ03
LA03
LB03
LC03
LD03
LE03
LF03
LG03
LH03
LJ03
LK03
LL03
LM03
LN03
LP03
LQ03
LR03
LS03
LT03
LU03
LV03
LW03
LX03
LY03
LZ03
MA03
MB03
MC03
MD03
ME03
MF03
MG03
MH03
MJ03
MK03
ML03
MM03
MN03
MP03
MQ03
MR03
MS03
MT03
MU03
MV03
MW03
MX03
MY03
MZ03
NA03
NB03
NC03
ND03
NE03
NF03
NG03
NH03
NJ03
NK03
NL03
NM03
NN03
NP03
NQ03
NR03
NS03
NT03
NU03
NV03
NW03
NX03
NY03
NZ03
PA03
PB03
PC03
PD03
PE03
PF03
PG03
PH03
PJ03
PK03
PL03
PM03
PN03
PP03
PQ03
PR03
PS03
PT03
PU03
PV03
PW03
PX03
PY03
PZ03
QA03
QB03
QC03
QD03
QE03
QF03
QG03
QH03
QJ03
QK03
QL03
QM03
QN03
QP03
QQ03
QR03
QS03
QT03
QU03
QV03
QW03
QX03
QY03
QZ03
RA03
RB03
RC03
RD03
RE03
RF03
RG03
RH03
RJ03
RK03
RL03
RM03
RN03
RP03
RQ03
RR03
RS03
RT03
RU03
RV03
RW03
RX03
RY03
RZ03
SA03
SB03
SC03
SD03
SE03
SF03
SG03
SH03
SJ03
SK03
SL03
SM03
SN03
SP03
SQ03
SR03
SS03
ST03
SU03
SV03
SW03
SX03
SY03
SZ03
TA03
TB03
TC03
TD03
TE03
TF03
TG03
TH03
TJ03
TK03
TL03
TM03
TN03
TP03
TQ03
TR03
TS03
TT03
TU03
TV03
TW03
TX03
TY03
TZ03
UA03
UB03
UC03
UD03
UE03
UF03
UG03
UH03
UJ03
UK03
UL03
UM03
UN03
UP03
UQ03
UR03
US03
UT03
UU03
UV03
UW03
UX03
UY03
UZ03
VA03
VB03
VC03
VD03
VE03
VF03
VG03
VH03
VJ03
VK03
VL03
VM03
VN03
VP03
VQ03
VR03
VS03
VT03
VU03
VV03
VW03
VX03
VY03
VZ03
WA03
WB03
WC03
WD03
WE03
WF03
WG03
WH03
WJ03
WK03
WL03
WM03
WN03
WP03
WQ03
WR03
WS03
WT03
WU03
WV03
WW03
WX03
WY03
WZ03
XA03
XB03
XC03
XD03
XE03
XF03
XG03
XH03
XJ03
XK03
XL03
XM03
XN03
XP03
XQ03
XR03
XS03
XT03
XU03
XV03
XW03
XX03
XY03
XZ03
YA03
YB03
YC03
YD03
YE03
YF03
YG03
YH03
YJ03
YK03
YL03
YM03
YN03
YP03
YQ03
YR03
YS03
YT03
YU03
YV03
YW03
YX03
YY03
YZ03
ZA03
ZB03
ZC03
ZD03
ZE03
ZF03
ZG03
ZH03
ZJ03
ZK03
ZL03
ZM03
ZN03
ZP03
ZQ03
ZR03
ZS03
ZT03
ZU03
ZV03
ZW03
ZX03
ZY03
ZZ03
AA04
AB04
AC04
AD04
AE04
AF04
AG04
AH04
AJ04
AK04
AL04
AM04
AN04
AP04
AQ04
AR04
AS04
AT04
AU04
AV04
AW04
AX04
AY04
AZ04
BA04
BB04
BC04
BD04
BE04
BF04
BG04
BH04
BJ04
BK04
BL04
BM04
BN04
BP04
BQ04
BR04
BS04
BT04
BU04
BV04
BW04
BX04
BY04
BZ04
CA04
CB04
CC04
CD04
CE04
CF04
CG04
CH04
CJ04
CK04
CL04
CM04
CN04
CP04
CQ04
CR04
CS04
CT04
CU04
CV04
CW04
CX04
CY04
CZ04
DA04
DB04
DC04
DD04
DE04
DF04
DG04
DH04
DJ04
DK04
DL04
DM04
DN04
DP04
DQ04
DR04
DS04
DT04
DU04
DV04
DW04
DX04
DY04
DZ04
EA04
EB04
EC04
ED04
EE04
EF04
EG04
EH04
EJ04
EK04
EL04
EM04
EN04
EP04
EQ04
ER04
ES04
ET04
EU04
EV04
EW04
EX04
EY04
EZ04
FA04
FB04
FC04
FD04
FE04
FF04
FG04
FH04
FJ04
FK04
FL04
FM04
FN04
FP04
FQ04
FR04
FS04
FT04
FU04
FV04
FW04
FX04
FY04
FZ04
GA04
GB04
GC04
GD04
GE04
GF04
GG04
GH04
GJ04
GK04
GL04
GM04
GN04
GP04
GQ04
GR04
GS04
GT04
GU04
GV04
GW04
GX04
GY04
GZ04
HA04
HB04
HC04
HD04
HE04
HF04
HG04
HH04
HJ04
HK04
HL04
HM04
HN04
HP04
HQ04
HR04
HS04
HT04
HU04
HV04
HW04
HX04
HY04
HZ04
JA04
JB04
JC04
JD04
JE04
JF04
JG04
JH04
JJ04
JK04
JL04
JM04
JN04
JP04
JQ04
JR04
JS04
JT04
JU04
JV04
JW04
JX04
JY04
JZ04
KA04
KB04
KC04
KD04
KE04
KF04
KG04
KH04
KJ04
KK04
KL04
KM04
KN04
KP04
KQ04
KR04
KS04
KT04
KU04
KV04
KW04
KX04
KY04
KZ04
LA04
LB04
LC04
LD04
LE04
LF04
LG04
LH04
LJ04
LK04
LL04
LM04
LN04
LP04
LQ04
LR04
LS04
LT04
LU04
LV04
LW04
LX04
LY04
LZ04
MA04
MB04
MC04
MD04
ME04
MF04
MG04
MH04
MJ04
MK04
ML04
MM04
MN04
MP04
MQ04
MR04
MS04
MT04
MU04
MV04
MW04
MX04
MY04
MZ04
NA04
NB04
NC04
ND04
NE04
NF04
NG04
NH04
NJ04
NK04
NL04
NM04
NN04
NP04
NQ04
NR04
NS04
NT04
NU04
NV04
NW04
NX04
NY04
NZ04
PA04
PB04
PC04
PD04
PE04
PF04
PG04
PH04
PJ04
PK04
PL04
PM04
PN04
PP04
PQ04
PR04
PS04
PT04
PU04
PV04
PW04
PX04
PY04
PZ04
QA04
QB04
QC04
QD04
QE04
QF04
QG04
QH04
QJ04
QK04
QL04
QM04
QN04
QP04
QQ04
QR04
QS04
QT04
QU04
QV04
QW04
QX04
QY04
QZ04
RA04
RB04
RC04
RD04
RE04
RF04
RG04
RH04
RJ04
RK04
RL04
RM04
RN04
RP04
RQ04
RR04
RS04
RT04
RU04
RV04
RW04
RX04
RY04
RZ04
SA04
SB04
SC04
SD04
SE04
SF04
SG04
SH04
SJ04
SK04
SL04
SM04
SN04
SP04
SQ04
SR04
SS04
ST04
SU04
SV04
SW04
SX04
SY04
SZ04
TA04
TB04
TC04
TD04
TE04
TF04
TG04
TH04
TJ04
TK04
TL04
TM04
TN04
TP04
TQ04
TR04
TS04
TT04
TU04
TV04
TW04
TX04
TY04
TZ04
UA04
UB04
UC04
UD04
UE04
UF04
UG04
UH04
UJ04
UK04
UL04
UM04
UN04
UP04
UQ04
UR04
US04
UT04
UU04
UV04
UW04
UX04
UY04
UZ04
VA04
VB04
VC04
VD04
VE04
VF04
VG04
VH04
VJ04
VK04
VL04
VM04
VN04
VP04
VQ04
VR04
VS04
VT04
VU04
VV04
VW04
VX04
VY04
VZ04
WA04
WB04
WC04
WD04
WE04
WF04
WG04
WH04
WJ04
WK04
WL04
WM04
WN04
WP04
WQ04
WR04
WS04
WT04
WU04
WV04
WW04
WX04
WY04
WZ04
XA04
XB04
XC04
XD04
XE04
XF04
XG04
XH04
XJ04
XK04
XL04
XM04
XN04
XP04
XQ04
XR04
XS04
XT04
XU04
XV04
XW04
XX04
XY04
XZ04
YA04
YB04
YC04
YD04
YE04
YF04
YG04
YH04
YJ04
YK04
YL04
YM04
YN04
YP04
YQ04
YR04
YS04
YT04
YU04
YV04
YW04
YX04
YY04
YZ04
ZA04
ZB04
ZC04
ZD04
ZE04
ZF04
ZG04
ZH04
ZJ04
ZK04
ZL04
ZM04
ZN04
ZP04
ZQ04
ZR04
ZS04
ZT04
ZU04
ZV04
ZW04
ZX04
ZY04
ZZ04
AA05
AB05
AC05
AD05
AE05
AF05
AG05
AH05
AJ05
AK05
AL05
AM05
AN05
AP05
AQ05
AR05
AS05
AT05
AU05
AV05
AW05
AX05
AY05
AZ05
BA05
BB05
BC05
BD05
BE05
BF05
BG05
BH05
BJ05
BK05
BL05
BM05
BN05
BP05
BQ05
BR05
BS05
BT05
BU05
BV05
BW05
BX05
BY05
BZ05
CA05
CB05
CC05
CD05
CE05
CF05
CG05
CH05
CJ05
CK05
CL05
CM05
CN05
CP05
CQ05
CR05
CS05
CT05
CU05
CV05
CW05
CX05
CY05
CZ05
DA05
DB05
DC05
DD05
DE05
DF05
DG05
DH05
DJ05
DK05
DL05
DM05
DN05
DP05
DQ05
DR05
DS05
DT05
DU05
DV05
DW05
DX05
DY05
DZ05
EA05
EB05
EC05
ED05
EE05
EF05
EG05
EH05
EJ05
EK05
EL05
EM05
EN05
EP05
EQ05
ER05
ES05
ET05
EU05
EV05
EW05
EX05
EY05
EZ05
FA05
FB05
FC05
FD05
FE05
FF05
FG05
FH05
FJ05
FK05
FL05
FM05
FN05
FP05
FQ05
FR05
FS05
FT05
FU05
FV05
FW05
FX05
FY05
FZ05
GA05
GB05
GC05
GD05
GE05
GF05
GG05
GH05
GJ05
GK05
GL05
GM05
GN05
GP05
GQ05
GR05
GS05
GT05
GU05
GV05
GW05
GX05
GY05
GZ05
HA05
HB05
HC05
HD05
HE05
HF05
HG05
HH05
HJ05
HK05
HL05
HM05
HN05
HP05
HQ05
HR05
HS05
HT05
HU05
HV05
HW05
HX05
HY05
HZ05
JA05
JB05
JC05
JD05
JE05
JF05
JG05
JH05
JJ05
JK05
JL05
JM05
JN05
JP05
JQ05
JR05
JS05
JT05
JU05
JV05
JW05
JX05
JY05
JZ05
KA05
KB05
KC05
KD05
KE05
KF05
KG05
KH05
KJ05
KK05
KL05
KM05
KN05
KP05
KQ05
KR05
KS05
KT05
KU05
KV05
KW05
KX05
KY05
KZ05
LA05
LB05
LC05
LD05
LE05
LF05
LG05
LH05
LJ05
LK05
LL05
LM05
LN05
LP05
LQ05
LR05
LS05
LT05
LU05
LV05
LW05
LX05
LY05
LZ05
MA05
MB05
MC05
MD05
ME05
MF05
MG05
MH05
MJ05
MK05
ML05
MM05
MN05
MP05
MQ05
MR05
MS05
MT05
MU05
MV05
MW05
MX05
MY05
MZ05
NA05
NB05
NC05
ND05
NE05
NF05
NG05
NH05
NJ05
NK05
NL05
NM05
NN05
NP05
NQ05
NR05
NS05
NT05
NU05
NV05
NW05
NX05
NY05
NZ05
PA05
PB05
PC05
PD05
PE05
PF05
PG05
PH05
PJ05
PK05
PL05
PM05
PN05
PP05
PQ05
PR05
PS05
PT05
PU05
PV05
PW05
PX05
PY05
PZ05
QA05
QB05
QC05
QD05
QE05
QF05
QG05
QH05
QJ05
QK05
QL05
QM05
QN05
QP05
QQ05
QR05
QS05
QT05
QU05
QV05
QW05
QX05
QY05
QZ05
RA05
RB05
RC05
RD05
RE05
RF05
RG05
RH05
RJ05
RK05
RL05
RM05
RN05
RP05
RQ05
RR05
RS05
RT05
RU05
RV05
RW05
RX05
RY05
RZ05
SA05
SB05
SC05
SD05
SE05
SF05
SG05
SH05
SJ05
SK05
SL05
SM05
SN05
SP05
SQ05
SR05
SS05
ST05
SU05
SV05
SW05
SX05
SY05
SZ05
TA05
TB05
TC05
TD05
TE05
TF05
TG05
TH05
TJ05
TK05
TL05
TM05
TN05
TP05
TQ05
TR05
TS05
TT05
TU05
TV05
TW05
TX05
TY05
TZ05
UA05
UB05
UC05
UD05
UE05
UF05
UG05
UH05
UJ05
UK05
UL05
UM05
UN05
UP05
UQ05
UR05
US05
UT05
UU05
UV05
UW05
UX05
UY05
UZ05
VA05
VB05
VC05
VD05
VE05
VF05
VG05
VH05
VJ05
VK05
VL05
VM05
VN05
VP05
VQ05
VR05
VS05
VT05
VU05
VV05
VW05
VX05
VY05
VZ05
WA05
WB05
WC05
WD05
WE05
WF05
WG05
WH05
WJ05
WK05
WL05
WM05
WN05
WP05
WQ05
WR05
WS05
WT05
WU05
WV05
WW05
WX05
WY05
WZ05
XA05
XB05
XC05
XD05
XE05
XF05
XG05
XH05
XJ05
XK05
XL05
XM05
XN05
XP05
XQ05
XR05
XS05
XT05
XU05
XV05
XW05
XX05
XY05
XZ05
YA05
YB05
YC05
YD05
YE05
YF05
YG05
YH05
YJ05
YK05
YL05
YM05
YN05
YP05
YQ05
YR05
YS05
YT05
YU05
YV05
YW05
YX05
YY05
YZ05
ZA05
ZB05
ZC05
ZD05
ZE05
ZF05
ZG05
ZH05
ZJ05
ZK05
ZL05
ZM05
ZN05
ZP05
ZQ05
ZR05
ZS05
ZT05
ZU05
ZV05
ZW05
ZX05
ZY05
ZZ05
AA06
AB06
AC06
AD06
AE06
AF06
AG06
AH06
AJ06
AK06
AL06
AM06
AN06
AP06
AQ06
AR06
AS06
AT06
AU06
AV06
AW06
AX06
AY06
AZ06
BA06
BB06
BC06
BD06
BE06
BF06
BG06
BH06
BJ06
BK06
BL06
BM06
BN06
BP06
BQ06
BR06
BS06
BT06
BU06
BV06
BW06
BX06
BY06
BZ06
CA06
CB06
CC06
CD06
CE06
CF06
CG06
CH06
CJ06
CK06
CL06
CM06
CN06
CP06
CQ06
CR06
CS06
CT06
CU06
CV06
CW06
CX06
CY06
CZ06
DA06
DB06
DC06
DD06
DE06
DF06
DG06
DH06
DJ06
DK06
DL06
DM06
DN06
DP06
DQ06
DR06
DS06
DT06
DU06
DV06
DW06
DX06
DY06
DZ06
EA06
EB06
EC06
ED06
EE06
EF06
EG06
EH06
EJ06
EK06
EL06
EM06
EN06
EP06
EQ06
ER06
ES06
ET06
EU06
EV06
EW06
EX06
EY06
EZ06
FA06
FB06
FC06
FD06
FE06
FF06
FG06
FH06
FJ06
FK06
FL06
FM06
FN06
FP06
FQ06
FR06
FS06
FT06
FU06
FV06
FW06
FX06
FY06
FZ06
GA06
GB06
GC06
GD06
GE06
GF06
GG06
GH06
GJ06
GK06
GL06
GM06
GN06
GP06
GQ06
GR06
GS06
GT06
GU06
GV06
GW06
GX06
GY06
GZ06
HA06
HB06
HC06
HD06
HE06
HF06
HG06
HH06
HJ06
HK06
HL06
HM06
HN06
HP06
HQ06
HR06
HS06
HT06
HU06
HV06
HW06
HX06
HY06
HZ06
JA06
JB06
JC06
JD06
JE06
JF06
JG06
JH06
JJ06
JK06
JL06
JM06
JN06
JP06
JQ06
JR06
JS06
JT06
JU06
JV06
JW06
JX06
JY06
JZ06
KA06
KB06
KC06
KD06
KE06
KF06
KG06
KH06
KJ06
KK06
KL06
KM06
KN06
KP06
KQ06
KR06
KS06
KT06
KU06
KV06
KW06
KX06
KY06
KZ06
LA06
LB06
LC06
LD06
LE06
LF06
LG06
LH06
LJ06
LK06
LL06
LM06
LN06
LP06
LQ06
LR06
LS06
LT06
LU06
LV06
LW06
LX06
LY06
LZ06
MA06
MB06
MC06
MD06
ME06
MF06
MG06
MH06
MJ06
MK06
ML06
MM06
MN06
MP06
MQ06
MR06
MS06
MT06
MU06
MV06
MW06
MX06
MY06
MZ06
NA06
NB06
NC06
ND06
NE06
NF06
NG06
NH06
NJ06
NK06
NL06
NM06
NN06
NP06
NQ06
NR06
NS06
NT06
NU06
NV06
NW06
NX06
NY06
NZ06
PA06
PB06
PC06
PD06
PE06
PF06
PG06
PH06
PJ06
PK06
PL06
PM06
PN06
PP06
PQ06
PR06
PS06
PT06
PU06
PV06
PW06
PX06
PY06
PZ06
QA06
QB06
QC06
QD06
QE06
QF06
QG06
QH06
QJ06
QK06
QL06
QM06
QN06
QP06
QQ06
QR06
QS06
QT06
QU06
QV06
QW06
QX06
QY06
QZ06
RA06
RB06
RC06
RD06
RE06
RF06
RG06
RH06
RJ06
RK06
RL06
RM06
RN06
RP06
RQ06
RR06
RS06
RT06
RU06
RV06
RW06
RX06
RY06
RZ06
SA06
SB06
SC06
SD06
SE06
SF06
SG06
SH06
SJ06
SK06
SL06
SM06
SN06
SP06
SQ06
SR06
SS06
ST06
SU06
SV06
SW06
SX06
SY06
SZ06
TA06
TB06
TC06
TD06
TE06
TF06
TG06
TH06
TJ06
TK06
TL06
TM06
TN06
TP06
TQ06
TR06
TS06
TT06
TU06
TV06
TW06
TX06
TY06
TZ06
UA06
UB06
UC06
UD06
UE06
UF06
UG06
UH06
UJ06
UK06
UL06
UM06
UN06
UP06
UQ06
UR06
US06
UT06
UU06
UV06
UW06
UX06
UY06
UZ06
VA06
VB06
VC06
VD06
VE06
VF06
VG06
VH06
VJ06
VK06
VL06
VM06
VN06
VP06
VQ06
VR06
VS06
VT06
VU06
VV06
VW06
VX06
VY06
VZ06
WA06
WB06
WC06
WD06
WE06
WF06
WG06
WH06
WJ06
WK06
WL06
WM06
WN06
WP06
WQ06
WR06
WS06
WT06
WU06
WV06
WW06
WX06
WY06
WZ06
XA06
XB06
XC06
XD06
XE06
XF06
XG06
XH06
XJ06
XK06
XL06
XM06
XN06
XP06
XQ06
XR06
XS06
XT06
XU06
XV06
XW06
XX06
XY06
XZ06
YA06
YB06
YC06
YD06
YE06
YF06
YG06
YH06
YJ06
YK06
YL06
YM06
YN06
YP06
YQ06
YR06
YS06
YT06
YU06
YV06
YW06
YX06
YY06
YZ06
ZA06
ZB06
ZC06
ZD06
ZE06
ZF06
ZG06
ZH06
ZJ06
ZK06
ZL06
ZM06
ZN06
ZP06
ZQ06
ZR06
ZS06
ZT06
ZU06
ZV06
ZW06
ZX06
ZY06
ZZ06
AA07
AB07
AC07
AD07
AE07
AF07
AG07
AH07
AJ07
AK07
AL07
AM07
AN07
AP07
AQ07
AR07
AS07
AT07
AU07
AV07
AW07
AX07
AY07
AZ07
BA07
BB07
BC07
BD07
BE07
BF07
BG07
BH07
BJ07
BK07
BL07
BM07
BN07
BP07
BQ07
BR07
BS07
BT07
BU07
BV07
BW07
BX07
BY07
BZ07
CA07
CB07
CC07
CD07
CE07
CF07
CG07
CH07
CJ07
CK07
CL07
CM07
CN07
CP07
CQ07
CR07
CS07
CT07
CU07
CV07
CW07
CX07
CY07
CZ07
DA07
DB07
DC07
DD07
DE07
DF07
DG07
DH07
DJ07
DK07
DL07
DM07
DN07
DP07
DQ07
DR07
DS07
DT07
DU07
DV07
DW07
DX07
DY07
DZ07
EA07
EB07
EC07
ED07
EE07
EF07
EG07
EH07
EJ07
EK07
EL07
EM07
EN07
EP07
EQ07
ER07
ES07
ET07
EU07
EV07
EW07
EX07
EY07
EZ07
FA07
FB07
FC07
FD07
FE07
FF07
FG07
FH07
FJ07
FK07
FL07
FM07
FN07
FP07
FQ07
FR07
FS07
FT07
FU07
FV07
FW07
FX07
FY07
FZ07
GA07
GB07
GC07
GD07
GE07
GF07
GG07
GH07
GJ07
GK07
GL07
GM07
GN07
GP07
GQ07
GR07
GS07
GT07
GU07
GV07
GW07
GX07
GY07
GZ07
HA07
HB07
HC07
HD07
HE07
HF07
HG07
HH07
HJ07
HK07
HL07
HM07
HN07
HP07
HQ07
HR07
HS07
HT07
HU07
HV07
HW07
HX07
HY07
HZ07
JA07
JB07
JC07
JD07
JE07
JF07
JG07
JH07
JJ07
JK07
JL07
JM07
JN07
JP07
JQ07
JR07
JS07
JT07
JU07
JV07
JW07
JX07
JY07
JZ07
KA07
KB07
KC07
KD07
KE07
KF07
KG07
KH07
KJ07
KK07
KL07
KM07
KN07
KP07
KQ07
KR07
KS07
KT07
KU07
KV07
KW07
KX07
KY07
KZ07
LA07
LB07
LC07
LD07
LE07
LF07
LG07
LH07
LJ07
LK07
LL07
LM07
LN07
LP07
LQ07
LR07
LS07
LT07
LU07
LV07
LW07
LX07
LY07
LZ07
MA07
MB07
MC07
MD07
ME07
MF07
MG07
MH07
MJ07
MK07
ML07
MM07
MN07
MP07
MQ07
MR07
MS07
MT07
MU07
MV07
MW07
MX07
MY07
MZ07
NA07
NB07
NC07
ND07
NE07
NF07
NG07
NH07
NJ07
NK07
NL07
NM07
NN07
NP07
NQ07
NR07
NS07
NT07
NU07
NV07
NW07
NX07
NY07
NZ07
PA07
PB07
PC07
PD07
PE07
PF07
PG07
PH07
PJ07
PK07
PL07
PM07
PN07
PP07
PQ07
PR07
PS07
PT07
PU07
PV