STANDARDS CODE 2-7045

5804406

CARD CODE 4406 | 5804406

SHEET 6 OF 6

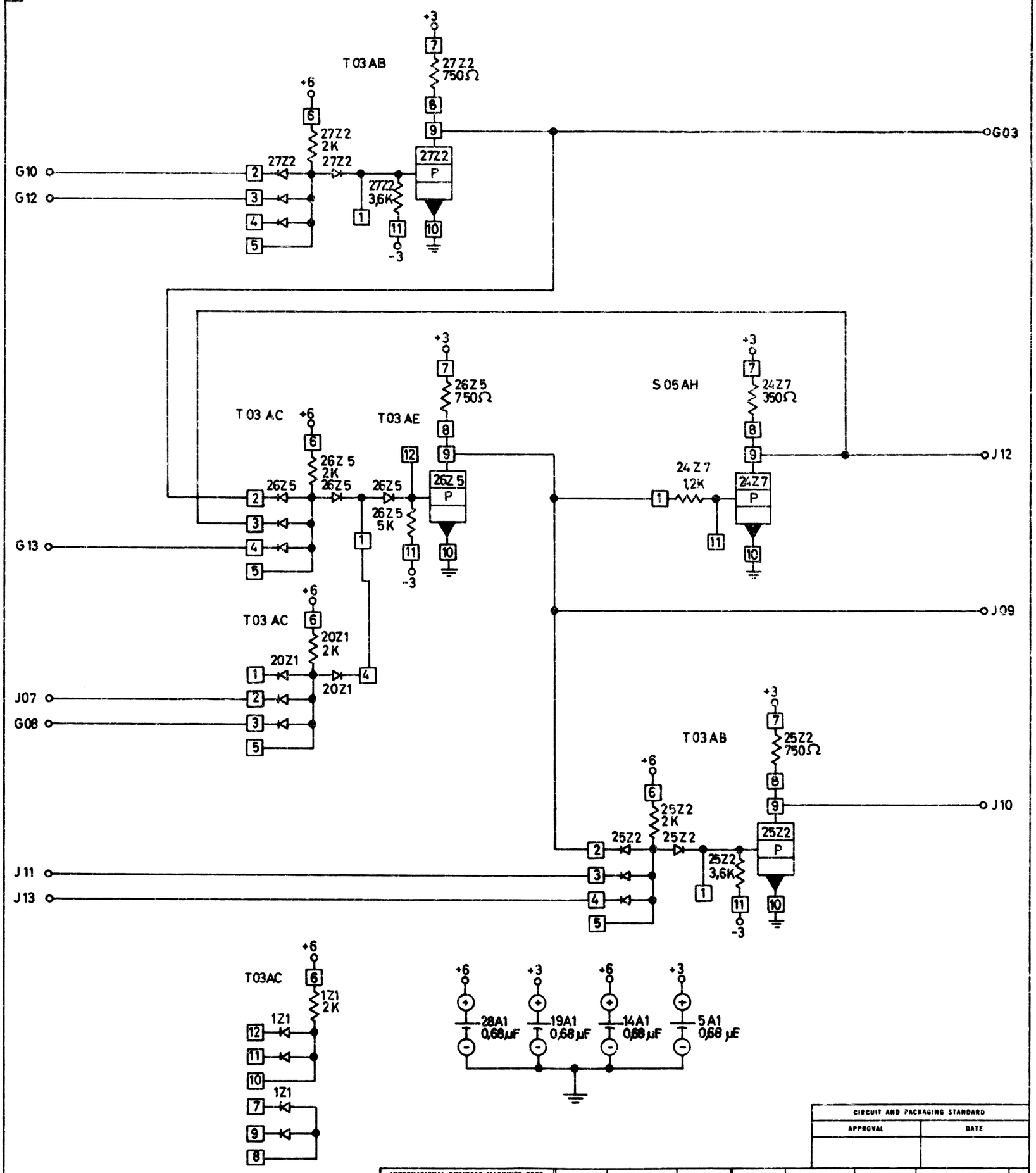

CIRCUIT AND PACKAGING STANDARD	
APPROVAL	DATE

INTERNATIONAL BUSINESS MACHINES CORP.					DATE	CHANGE NO.	APPROVAL	DATE	CHANGE NO.	APPROVAL	DEVELOPMENT NO.	5804406
NAME	MODIFIER				07-17-64	160607						
					14JAN66	162641 B						
DESIGN	DP	MODEL	2020									
DETAIL		SCALE	NONE									
CHECK	KL	DRAW									5804406	
APPRO		CHECK										

C

C. S. CO., NO. 8746W