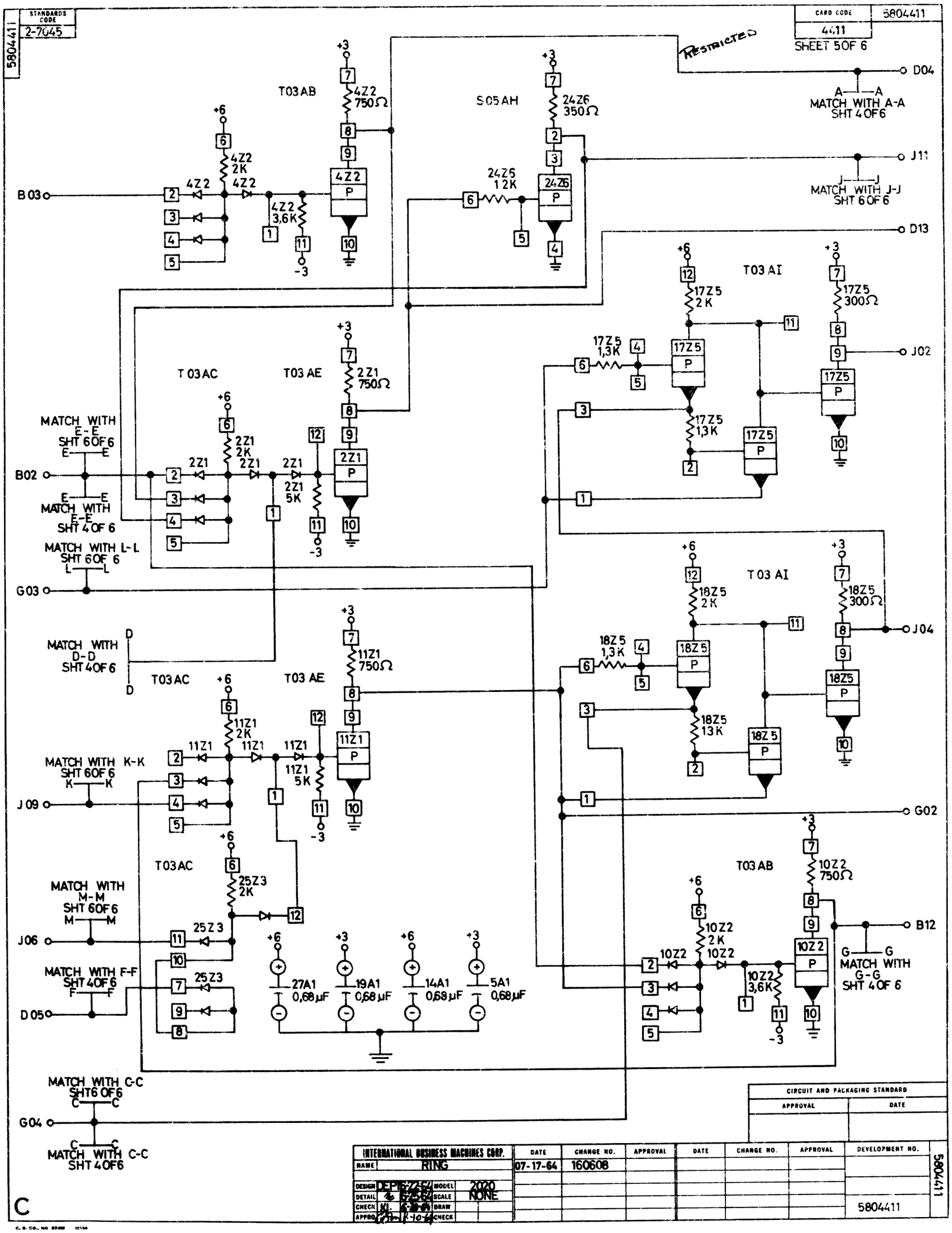
STANDARDS CODE 2-7045
5804411
CARD CODE 4411
5804411
SHEET 5 OF 6
RESTRICTED
T03AB
S05AH
T03AI
T03AC
T03AE
B03
B02
G03
J09
J06
D05
D04
J11
D13
J02
J04
G02
B12
G04
MATCH WITH A-A SHT 4 OF 6
MATCH WITH J-J SHT 6 OF 6
MATCH WITH E-E SHT 6 OF 6
MATCH WITH E-E SHT 4 OF 6
MATCH WITH L-L SHT 6 OF 6
MATCH WITH D-D SHT 4 OF 6
MATCH WITH K-K SHT 6 OF 6
MATCH WITH M-M SHT 6 OF 6
MATCH WITH F-F SHT 4 OF 6
MATCH WITH G-G SHT 4 OF 6
MATCH WITH C-C SHT 6 OF 6
MATCH WITH C-C SHT 4 OF 6
4Z2 750Ω
4Z2 2K
4Z2 3,6K
24Z6 350Ω
24Z6 1 2K
17Z5 2 K
17Z5 300Ω
17Z5 1,3K
2Z1 750Ω
2Z1 2K
2Z1 5K
18Z5 2 K
18Z5 300Ω
18Z5 1,3 K
18Z5 13 K
11Z1 750Ω
11Z1 2K
11Z1 5K
25Z3 2K
10Z2 750Ω
10Z2 2 K
10Z2 3,6K
27A1 0,68 μF
19A1 0,68 μF
14A1 0,68 μF
5A1 0,68 μF
CIRCUIT AND PACKAGING STANDARD
APPROVAL
DATE
INTERNATIONAL BUSINESS MACHINES CORP.
NAME RING
DESIGN
DETAIL
CHECK
APPROV
MODEL 2020
SCALE NONE
DRAW
CHECK
DATE 07-17-64
CHANGE NO. 160608
APPROVAL
DEVELOPMENT NO.
5804411
C