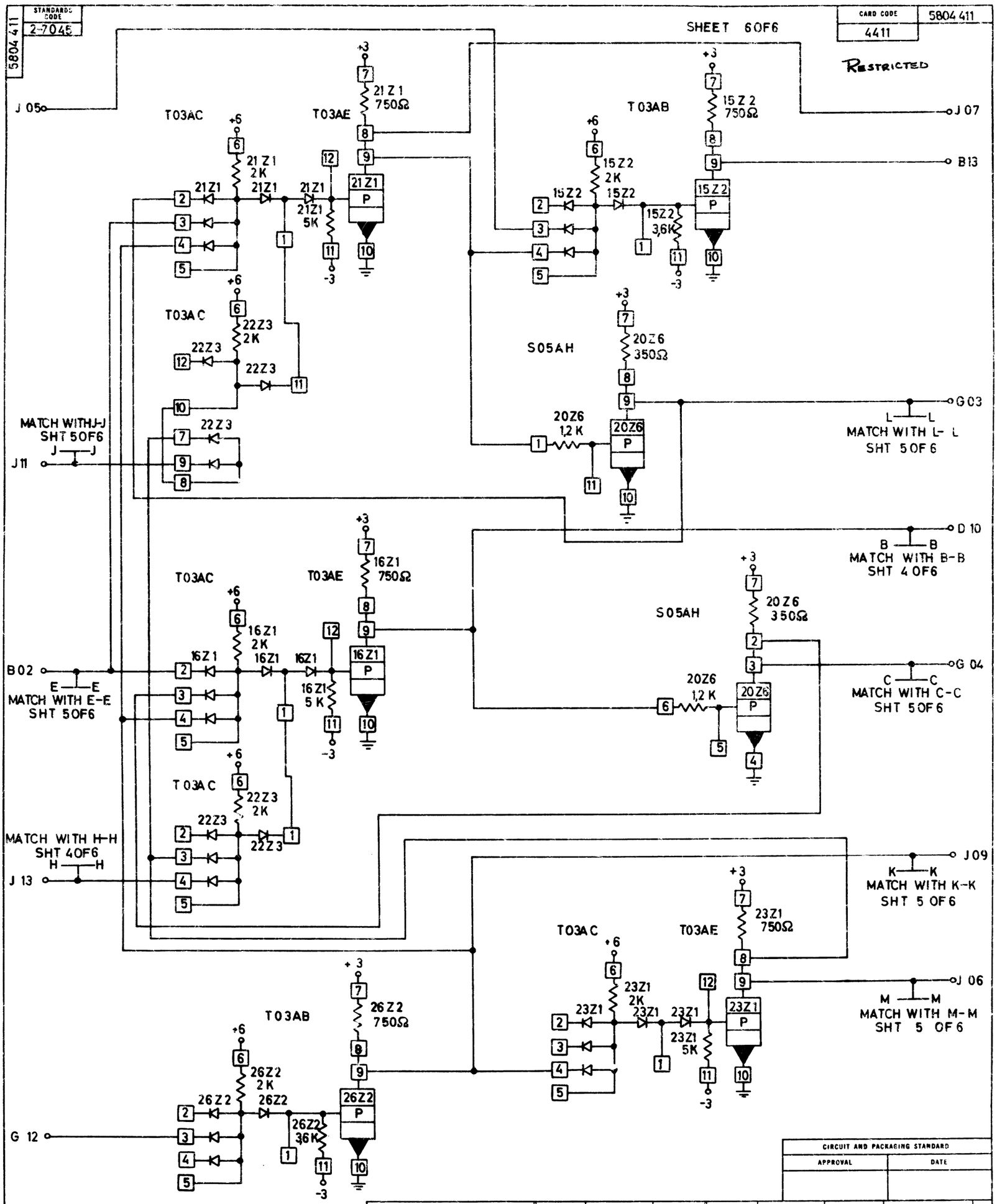
STANDARDS CODE 2-7045
5804 411
CARD CODE 4411
5804 411
SHEET 6 OF 6
RESTRICTED
J 05
J 07
B 13
G 03
D 10
G 04
J 09
J 06
B 02
G 12
J 11
J 13
T03AC
T03AE
T03AB
S05AH
21Z1 750Ω
21Z1 2K
21Z1 5K
15Z2 750Ω
15Z2 2K
15Z2 3,6K
22Z3 2K
20Z6 350Ω
20Z6 1,2K
16Z1 750Ω
16Z1 2K
16Z1 5K
23Z1 750Ω
23Z1 2K
23Z1 5K
26Z2 750Ω
26Z2 2K
26Z2 3,6K
MATCH WITH J-J SHT 5 OF 6
MATCH WITH L-L SHT 5 OF 6
MATCH WITH B-B SHT 4 OF 6
MATCH WITH C-C SHT 5 OF 6
MATCH WITH E-E SHT 5 OF 6
MATCH WITH H-H SHT 4 OF 6
MATCH WITH K-K SHT 5 OF 6
MATCH WITH M-M SHT 5 OF 6
CIRCUIT AND PACKAGING STANDARD
APPROVAL
DATE
INTERNATIONAL BUSINESS MACHINES CORP.
NAME RING
DESIGN DEP 16-2-64
DETAIL 52662
CHECK KL 6-26-64
APPROV 6-10-64
MODEL 2020
SCALE NONE
DRAW
CHECK
DATE 07-17-64
CHANGE NO. 160608
APPROVAL
DEVELOPMENT NO.
5804 411
C