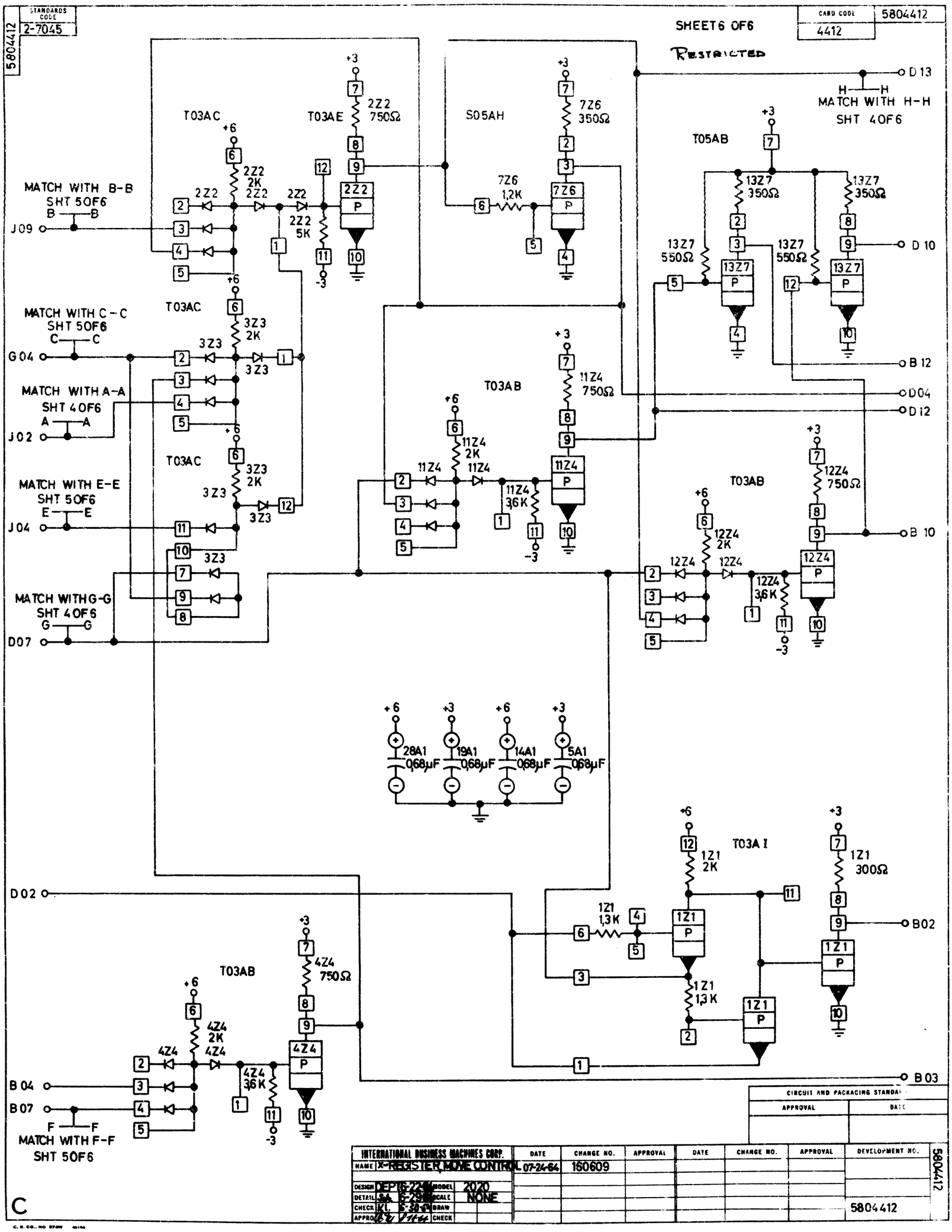
STANDARDS CODE 2-7045
5804412
SHEET 6 OF 6
CARD CODE 4412
5804412
RESTRICTED
D 13
H—H
MATCH WITH H-H
SHT 4 OF 6
T03AC
T03AE
2Z2 750Ω
S05AH
7Z6 350Ω
T05AB
13Z7 350Ω
13Z7 550Ω
D 10
B 12
D04
D12
MATCH WITH B-B
SHT 5 OF 6
B—B
J09
2Z2 2K
2Z2 5K
7Z6 1,2K
MATCH WITH C-C
SHT 5 OF 6
C—C
G04
3Z3 2K
T03AB
11Z4 750Ω
11Z4 2K
11Z4 3,6K
MATCH WITH A-A
SHT 4 OF 6
A—A
J02
MATCH WITH E-E
SHT 5 OF 6
E—E
J04
12Z4 750Ω
12Z4 2K
12Z4 3,6K
B 10
MATCH WITH G-G
SHT 4 OF 6
G—G
D07
28A1 0,68μF
19A1 0,68μF
14A1 0,68μF
5A1 0,68μF
T03A I
1Z1 2K
1Z1 300Ω
1Z1 1,3K
D02
B02
4Z4 750Ω
4Z4 2K
4Z4 3,6K
B 04
B 07
F—F
MATCH WITH F-F
SHT 5 OF 6
B 03
CIRCUIT AND PACKAGING STANDARDS
APPROVAL
DATE
INTERNATIONAL BUSINESS MACHINES CORP.
NAME X-REGISTER MOVE CONTROL
DESIGN DEP 6-22-64
DETAIL S.A. 6-29-64
CHECK K.L. 6-30-64
APPROVED
MODEL 2020
SCALE NONE
DRAW
CHECK
DATE 07-24-64
CHANGE NO. 160609
APPROVAL
DEVELOPMENT NO.
5804412
C