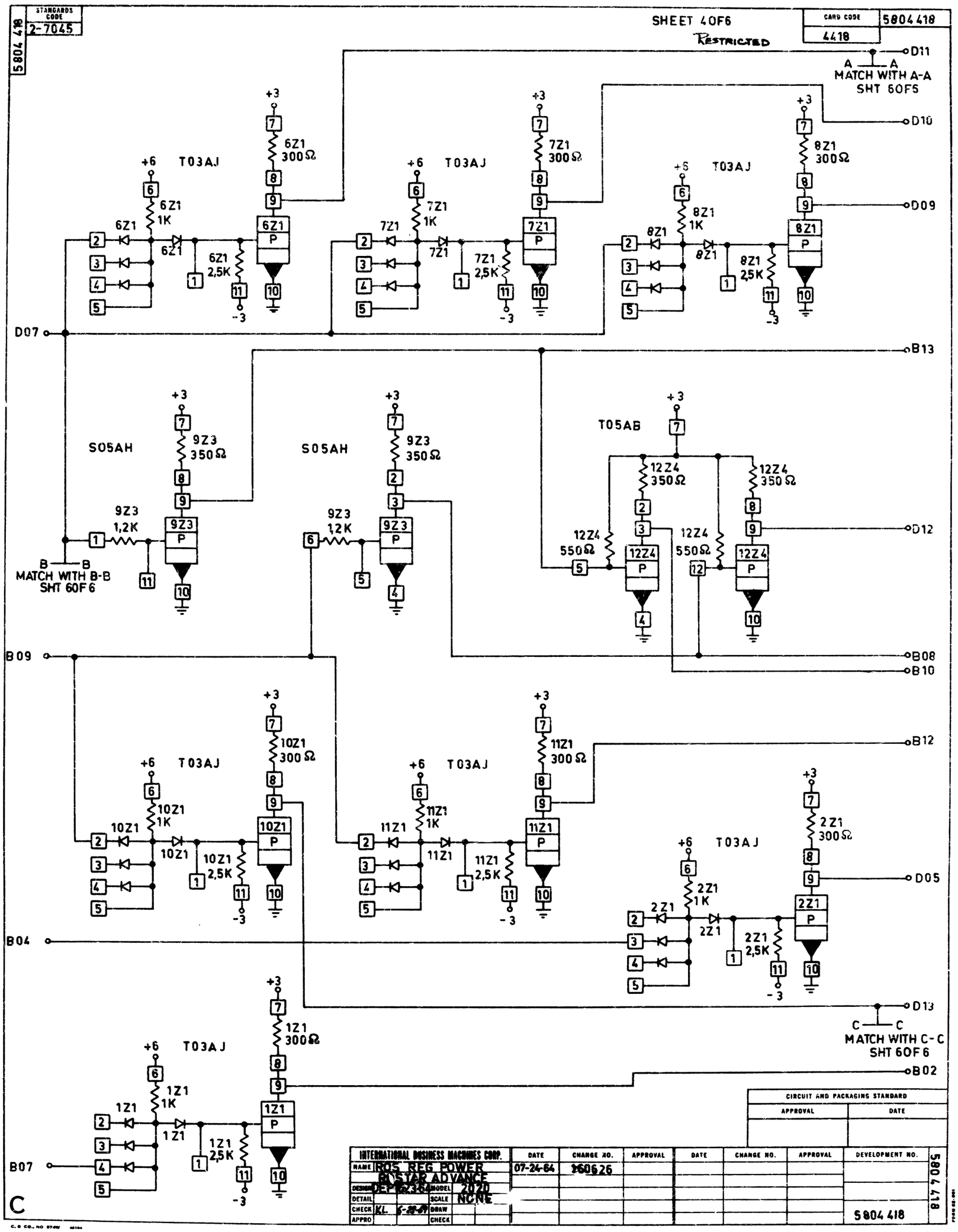
STANDARDS CODE 2-7045
5804 418
SHEET 4 OF 6
RESTRICTED
CARD CODE 4418
5804 418
D11
A — A
MATCH WITH A-A SHT 6 OF 5
D10
D09
D07
B13
B12
D05
D13
C — C
MATCH WITH C-C SHT 6 OF 6
B02
B09
B04
B07
B08
B10
B — B
MATCH WITH B-B SHT 6 OF 6
T03AJ
S05AH
T05AB
+3
+6
-3
6Z1 300Ω
7Z1 300Ω
8Z1 300Ω
9Z3 350Ω
9Z3 1,2K
12Z4 350Ω
12Z4 550Ω
10Z1 300Ω
11Z1 300Ω
2Z1 300Ω
1Z1 300Ω
6Z1 1K
7Z1 1K
8Z1 1K
10Z1 1K
11Z1 1K
2Z1 1K
1Z1 1K
6Z1 2,5K
7Z1 2,5K
8Z1 2,5K
10Z1 2,5K
11Z1 2,5K
2Z1 2,5K
1Z1 2,5K
P
C
INTERNATIONAL BUSINESS MACHINES CORP.
NAME R05 REG POWER
ROSTAR ADVANCE
DESIGN DEPT. 6234 MODEL 2020
DETAIL SCALE NONE
CHECK KL 6-22-64 DRAW
APPRO CHECK
DATE 07-24-64
CHANGE NO. 260626
APPROVAL
DATE
CHANGE NO.
APPROVAL
DEVELOPMENT NO.
5804 418
CIRCUIT AND PACKAGING STANDARD
APPROVAL
DATE