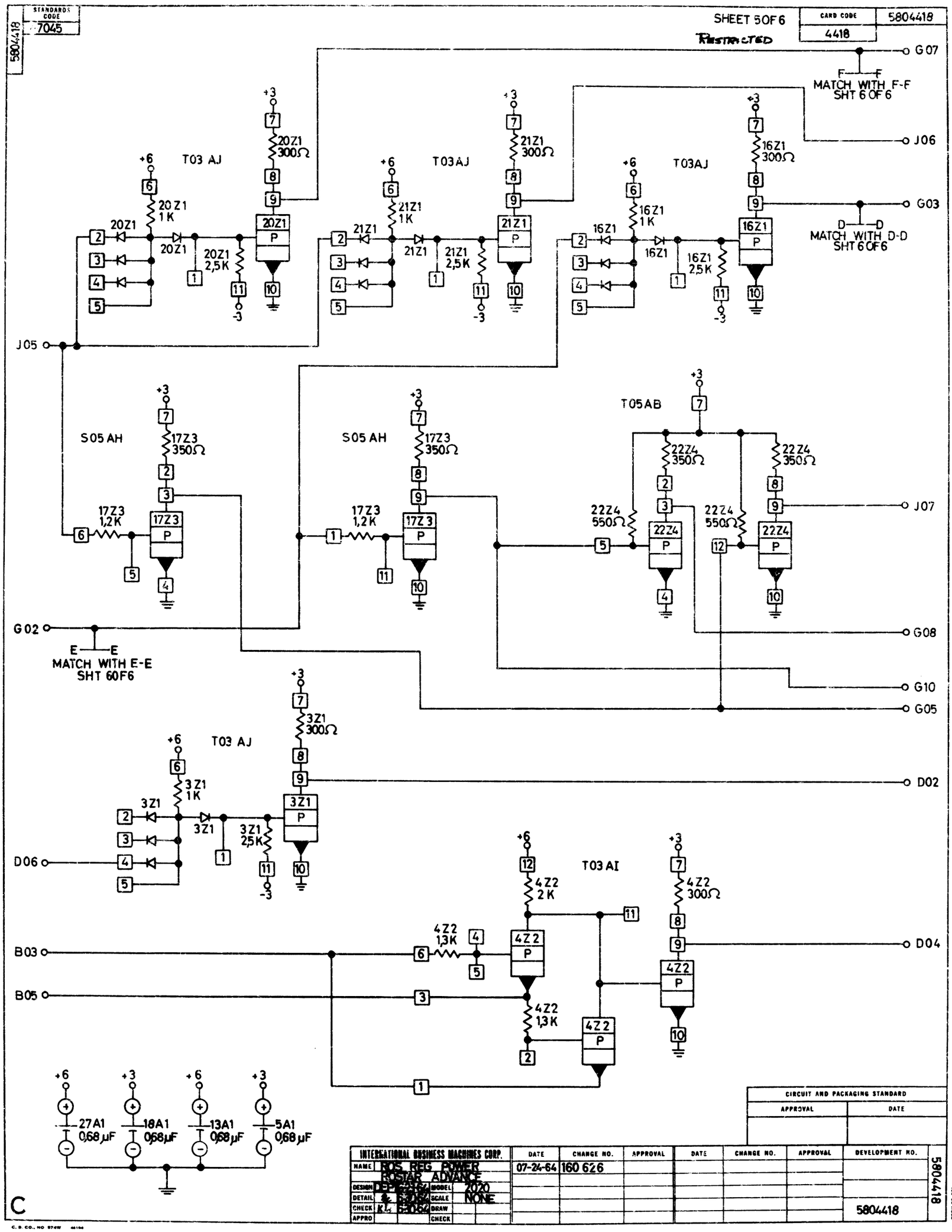
STANDARDS CODE 7045
5804418
SHEET 5 OF 6
RESTRICTED
CARD CODE 4418
5804418
G07
F—F
MATCH WITH F-F
SHT 6 OF 6
J06
G03
D—D
MATCH WITH D-D
SHT 6 OF 6
T03 AJ
T03AJ
T03AJ
20Z1 300Ω
21Z1 300Ω
16Z1 300Ω
20Z1 1K
21Z1 1K
16Z1 1K
20Z1 2,5K
21Z1 2,5K
16Z1 2,5K
J05
S05 AH
S05 AH
T05AB
17Z3 350Ω
17Z3 1,2K
22Z4 350Ω
22Z4 550Ω
J07
G08
G02
E—E
MATCH WITH E-E
SHT 6 OF 6
G10
G05
3Z1 300Ω
3Z1 1K
3Z1 2,5K
D02
D06
T03 AI
4Z2 2K
4Z2 300Ω
4Z2 1,3K
B03
B05
D04
27A1 0,68 μF
18A1 0,68 μF
13A1 0,68 μF
5A1 0,68 μF
C
CIRCUIT AND PACKAGING STANDARD
APPROVAL
DATE
INTERNATIONAL BUSINESS MACHINES CORP.
NAME ROS REG POWER
ROSTAR ADVANCE
DESIGN
DETAIL
CHECK
APPRO
MODEL 7020
SCALE NONE
DRAW
CHECK
DATE 07-24-64
CHANGE NO. 160 626
APPROVAL
DEVELOPMENT NO.
5804418
5804418