5804419

STANDARDS CODE 2-7045

SHEET 3 OF 5

CARD CODE 5804419

RESTRICTED

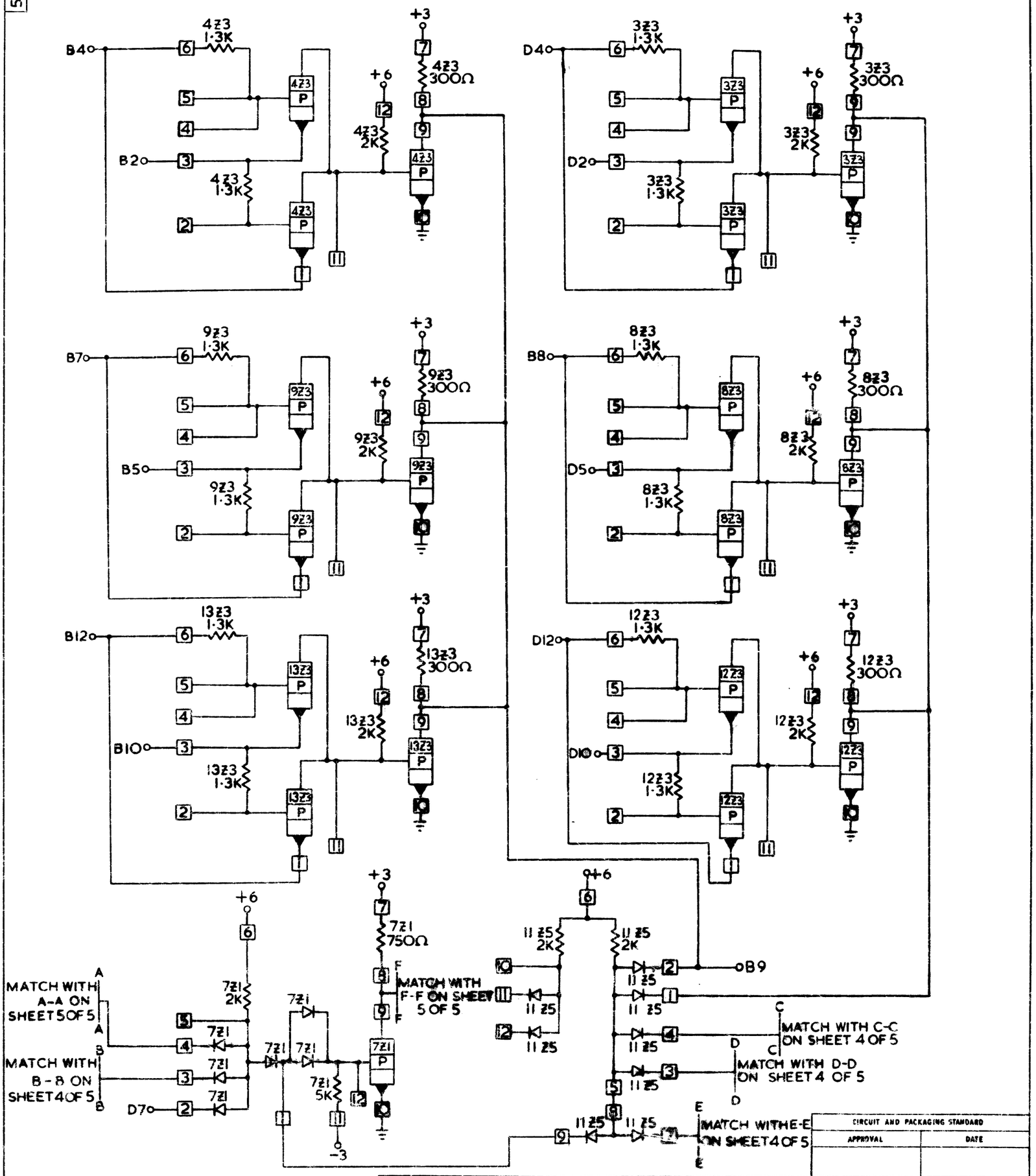

CIRCUIT AND PACKAGING STANDARD	
APPROVAL	DATE

INTERNATIONAL BUSINESS MACHINES CORP.																	
NAME	CARD ASM						DATE	CHANGE NO.	APPROVAL	DATE	CHANGE NO.	APPROVAL	DEVELOPMENT NO.	5804419
	FLOS ADDRESS COMPARE						08-07-64	EC160627						
DESIGN	STACK	6-2-64	MODEL	2020										
DETAIL	G.K.	7-7-64	SCALE	NONE										
CHECK		7-8-64	DRAW											
APPRO			CHECK											

C

5804419