5804419

STANDARDS CODE 2-70-45

SHEET 4 OF 5

CARD CODE 5804419

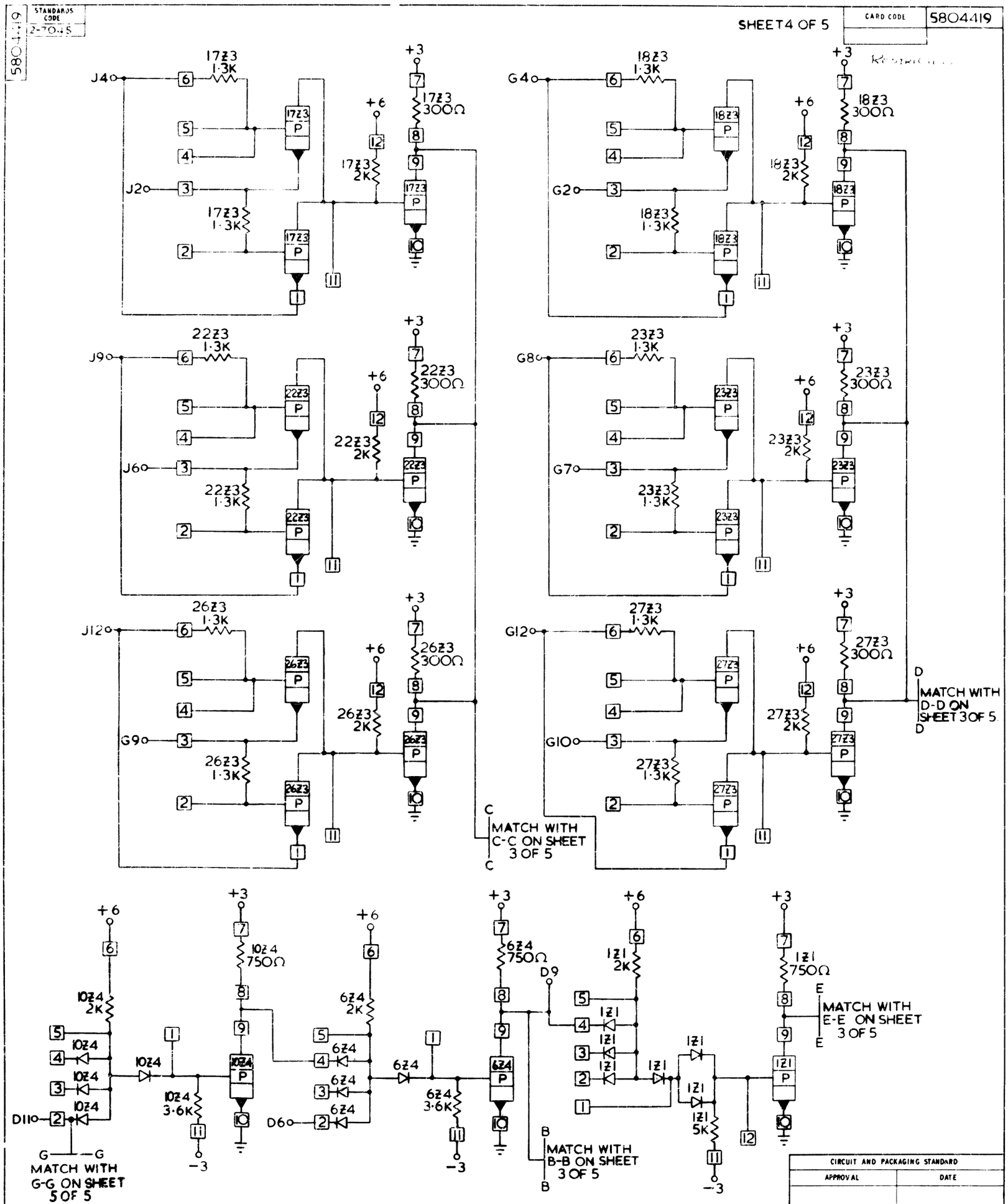

CIRCUIT AND PACKAGING STANDARD	
APPROVAL	DATE

INTERNATIONAL BUSINESS MACHINES CORP.					DATE	CHANGE NO.	APPROVAL	DATE	CHANGE NO.	APPROVAL	DEVELOPMENT NO.	
NAME	CARD ASM.				08-07-64	EC160627						5804419
ROS ADDRESS COMPARE												
DESIGN	STACY	6-2-64	MODEL	2020								
DETAIL	GK.	7-7-64	SCALE	NONE								
CHECK		7-8-64	DRAW								5804419	
APPRO		8-16-64	CHECK									

C

C. B. CO., NO 44-311

FORM 80-6276-1