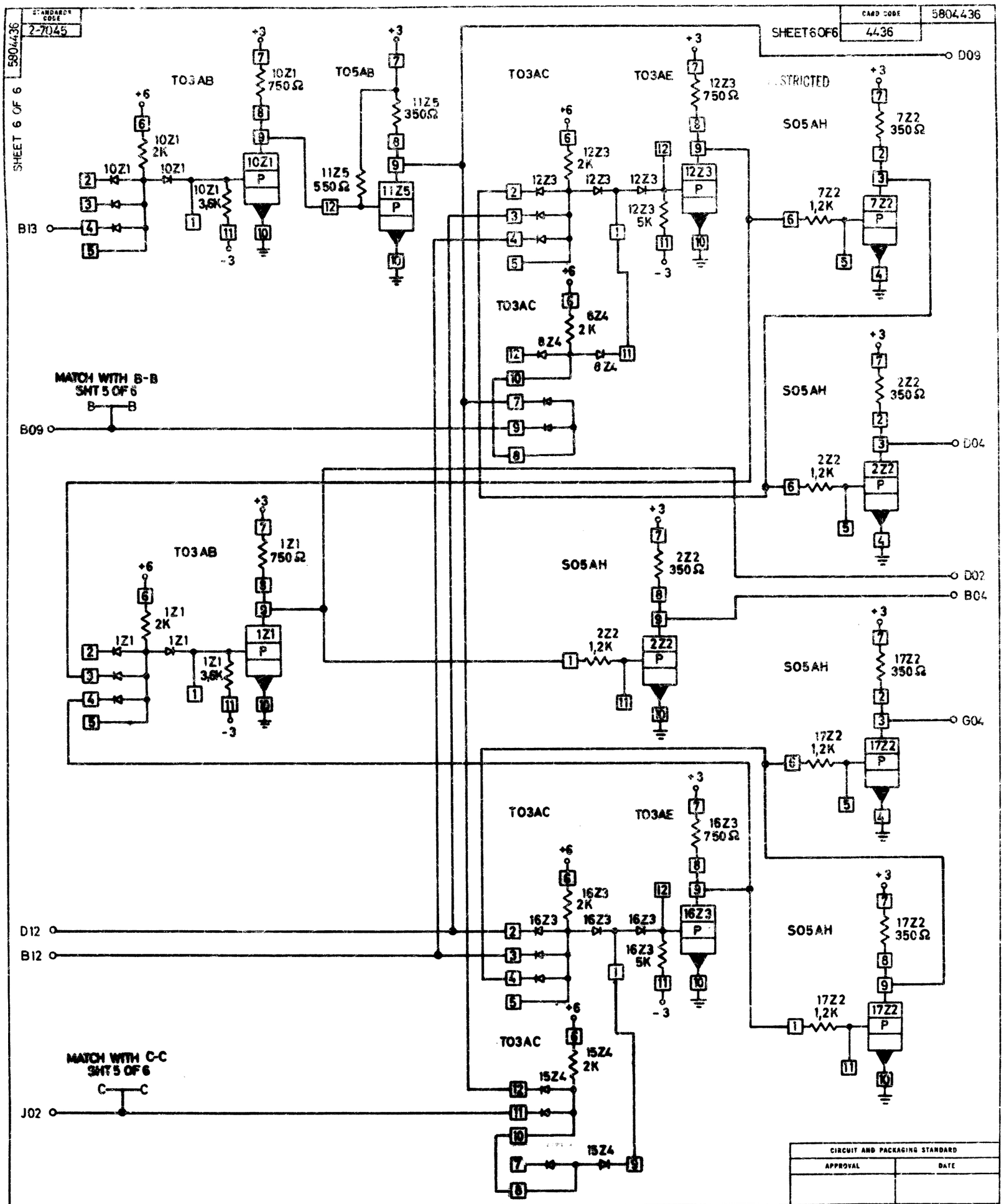
STANDARD CODE 2-7045
5804436
SHEET 6 OF 6
CARD CODE 4436
SHEET 6 OF 6
D09
TO3AB
TO5AB
TO3AC
TO3AE
RESTRICTED
SO5AH
10Z1 750Ω
11Z5 350Ω
11Z5 550Ω
10Z1 2K
10Z1 3,6K
12Z3 750Ω
12Z3 2K
12Z3 5K
7Z2 350Ω
7Z2 1,2K
B13
8Z4 2K
MATCH WITH B-B
SHT 5 OF 6
B09
2Z2 350Ω
2Z2 1,2K
D04
1Z1 750Ω
1Z1 2K
1Z1 3,6K
D02
B04
17Z2 350Ω
17Z2 1,2K
G04
16Z3 750Ω
16Z3 2K
16Z3 5K
D12
B12
15Z4 2K
MATCH WITH C-C
SHT 5 OF 6
J02
CIRCUIT AND PACKAGING STANDARD
APPROVAL
DATE
INTERNATIONAL BUSINESS MACHINES CORP.
NAME MFCM LOGIC 1
DATE
CHANGE NO.
APPROVAL
DEVELOPMENT NO.
08-21-64 160653
1-11-65 162614
DESIGN DEPT 17-23-64
DETAIL 9-13-64
CHECK 9-14-64
APPRD
MODEL 2020
SCALE NONE
DRAW
CHECK
5804436
C