THIS ALD HAS BEEN HAND CHECKED AGAINST THE WIRING

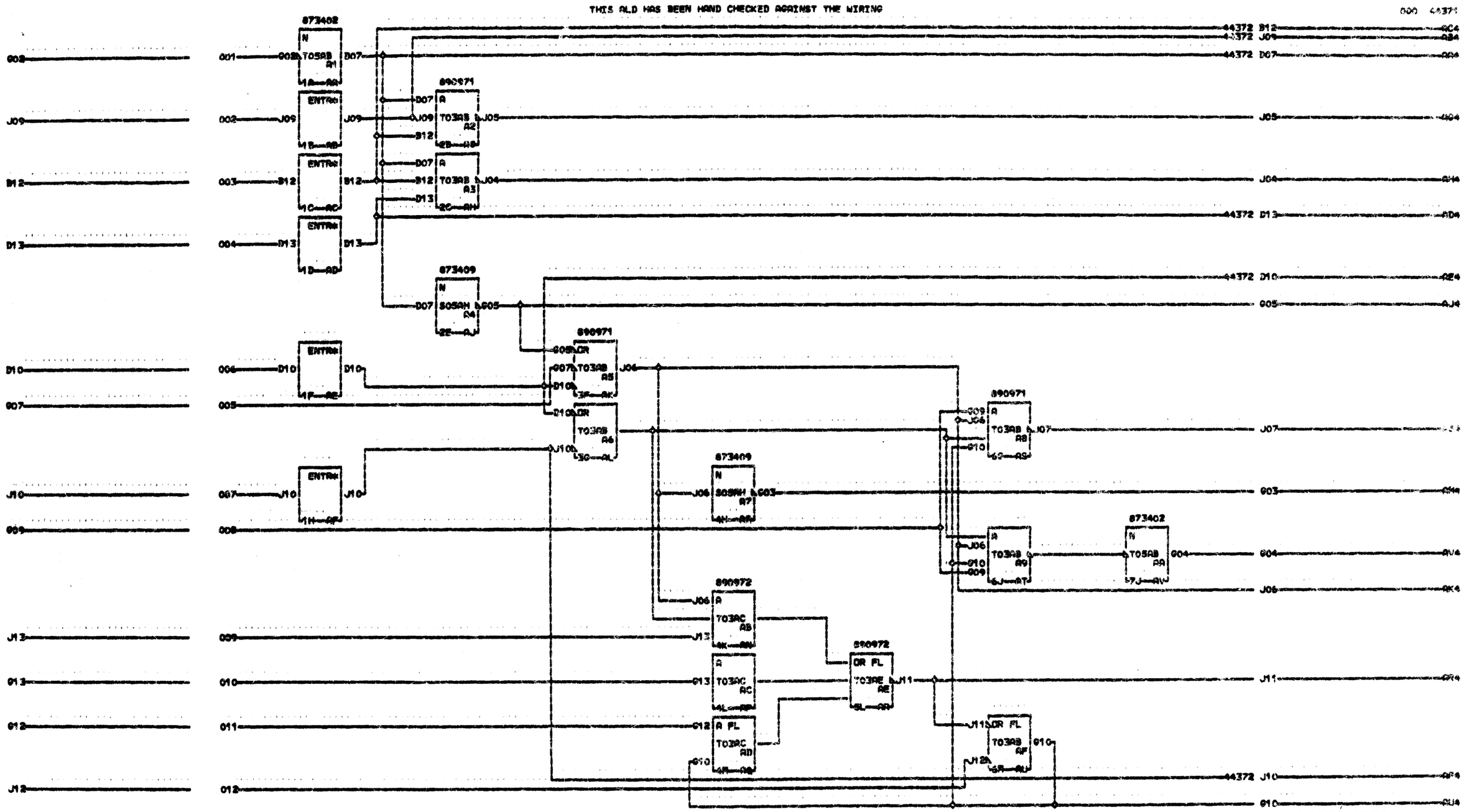

CARD SIZE0 2-24 PAC T03
VOLTAGE PINS
4 +6V0B110011 +3V0D030J03
4 -3V0B060006 GND>D080J08
3 SPECIAL RESTRICTED
7
1
000
SHEET 1 OF 7

08-21-64 160855

RESTRICTED

RFCR LOGIC 2
DATE 08-01-64 MACH. ASSEMBLY
LOG 333A FRAME
CD PG 1 OF 2 P.N. 5804437
IBM CORP. WTC BLK. AW