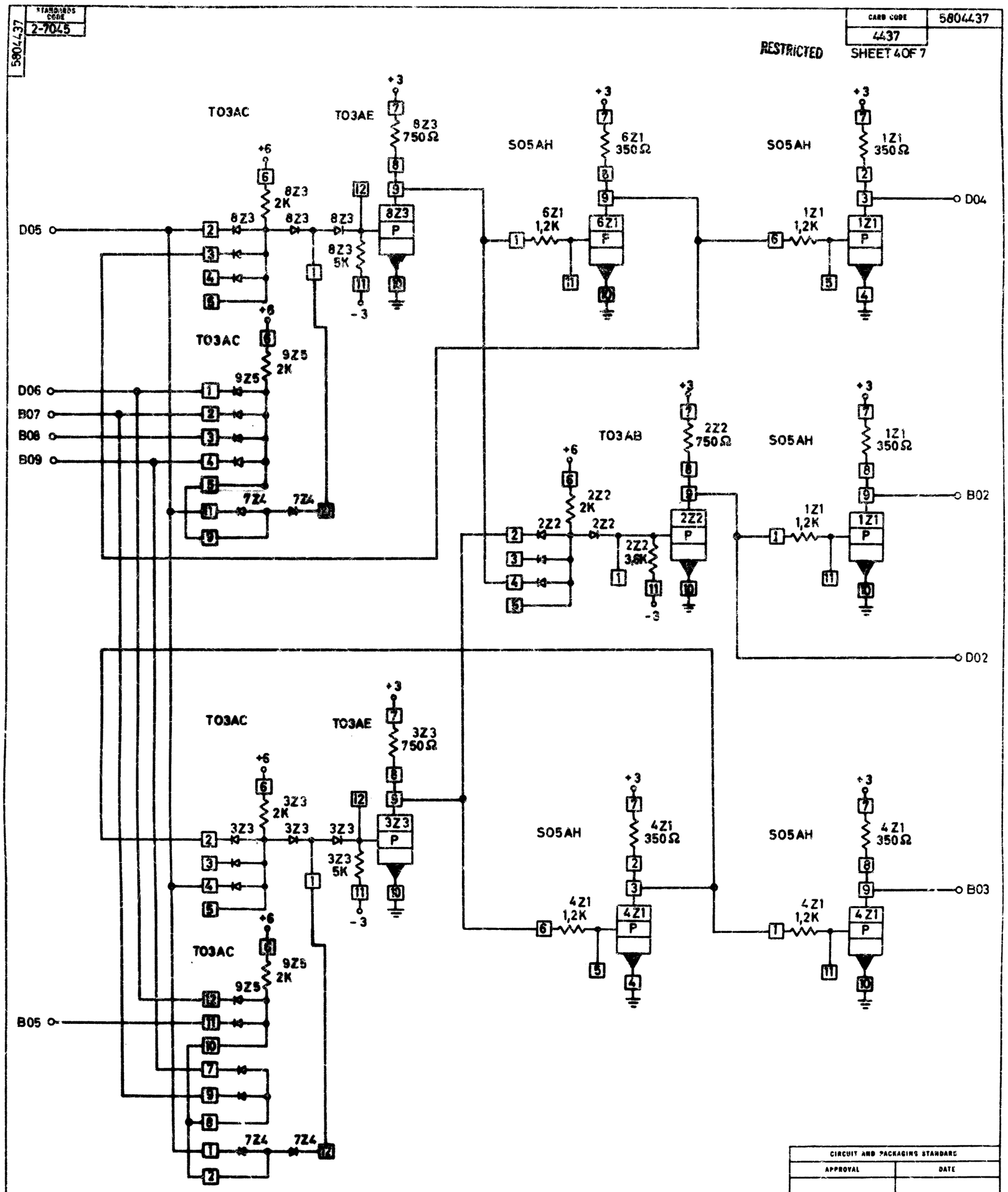
5804437
STANDARDS CODE 2-7045
CARD CODE 4437
5804437
RESTRICTED
SHEET 4 OF 7
TO3AC
TO3AE
S05AH
TO3AB
+3
+6
-3
8Z3 750Ω
8Z3 2K
8Z3 5K
6Z1 350Ω
6Z1 1,2K
1Z1 350Ω
1Z1 1,2K
9Z5 2K
7Z4
2Z2 750Ω
2Z2 2K
2Z2 3,6K
3Z3 750Ω
3Z3 2K
3Z3 5K
4Z1 350Ω
4Z1 1,2K
D05
D06
B07
B08
B09
D04
B02
D02
B05
B03
CIRCUIT AND PACKAGING STANDARDS
APPROVAL
DATE
INTERNATIONAL BUSINESS MACHINES CORP.
NAME MFCM LOGIC 2
DESIGN DEP 11-22-64
DETAIL 8-12-64
CHECK 8-14-64
APPRO
MODEL 2020
SCALE NONE
DRAW
CHECK
DATE
CHANGE NO.
APPROVAL
DEVELOPMENT NO.
08-21-64
160655
5804437
C