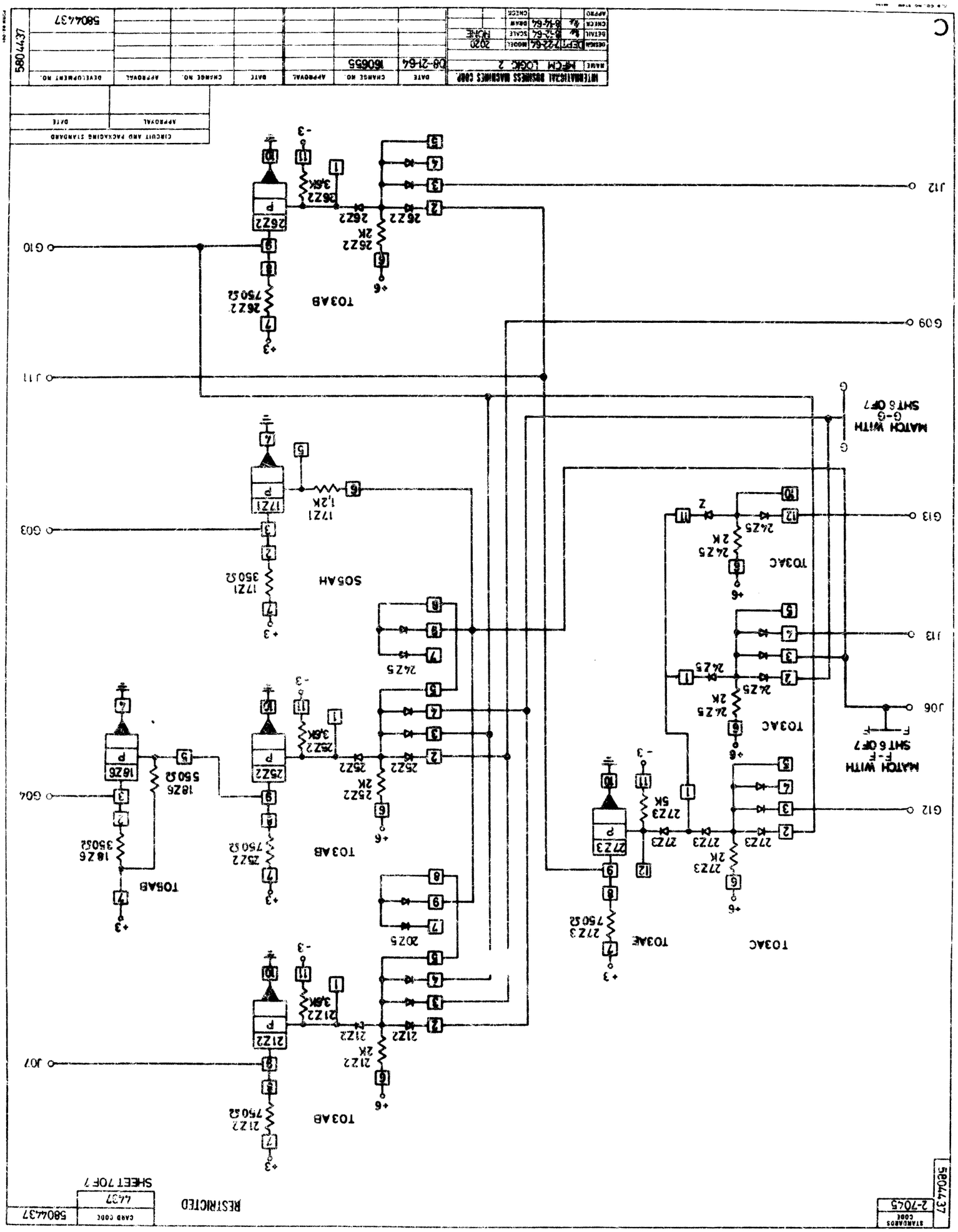
INTERNATIONAL BUSINESS MACHINES CORP.
NAME MFCM LOGIC 2
DATE 08-21-64
CHANGE NO. M0655
DESIGN DEPT17-22-64
MODEL 2020
DETAIL 8-2-64
SCALE NONE
CHECK 8-14-64
DRAW
APPRO
CHECK
5804437
CIRCUIT AND PACKAGING STANDARD
APPROVAL
DATE
DEVELOPMENT NO.
J12
G09
J11
G10
J13
G13
J06
MATCH WITH G-6 SHT 6 OF 7
MATCH WITH F-F SHT 6 OF 7
G12
J07
G03
G04
TO3AB
TO3AC
TO3AE
TO5AB
TO5AH
RESTRICTED
SHEET 7 OF 7
5804437
2-7045