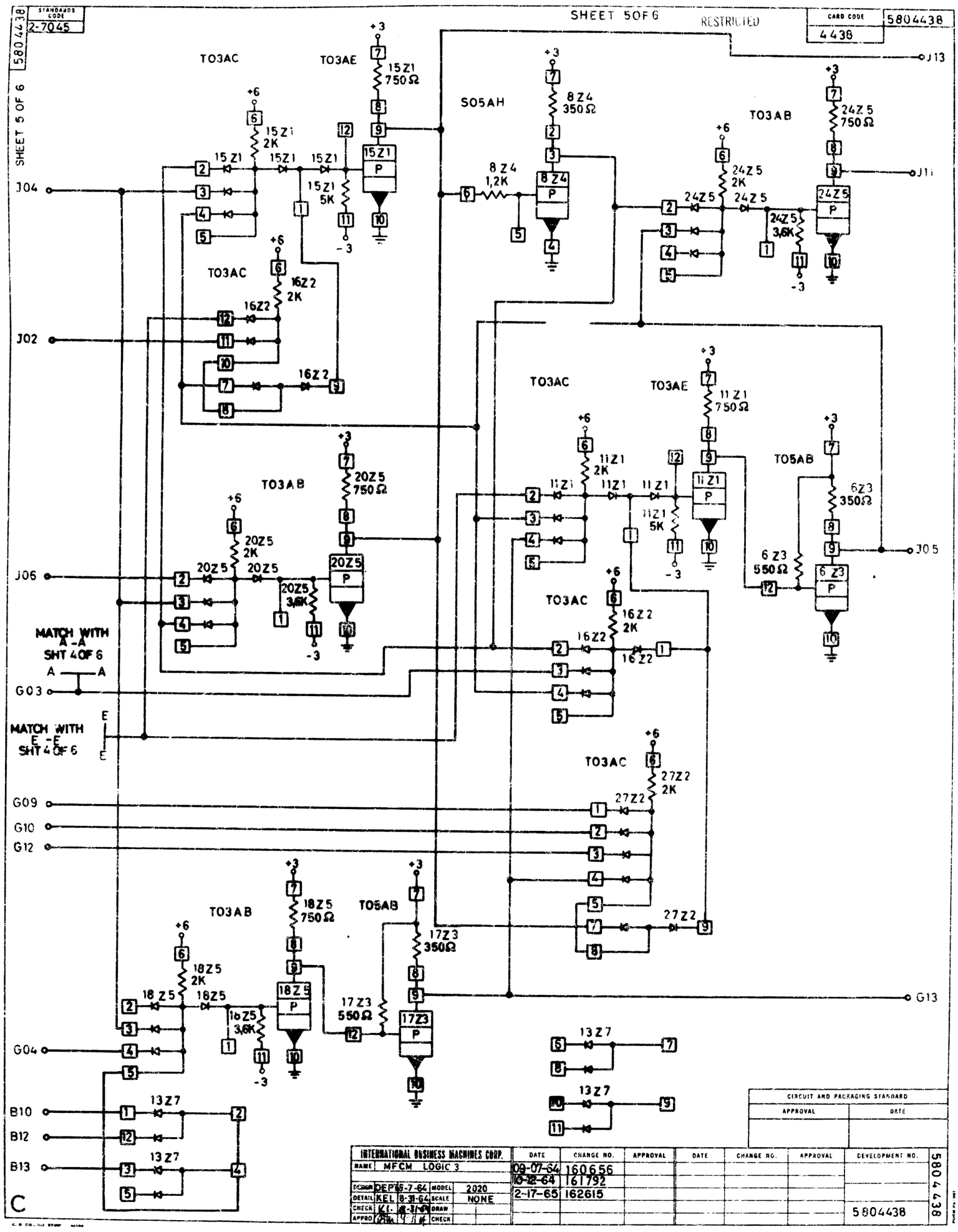
STANDARDS CODE 2-7045
5804438
SHEET 5 OF 6
SHEET 5OF6
RESTRICTED
CARD CODE 4438
5804438
TO3AC
TO3AE
15Z1 750Ω
15Z1 2K
15Z1 5K
S05AH
8Z4 350Ω
8Z4 1,2K
TO3AB
24Z5 750Ω
24Z5 2K
24Z5 3,6K
16Z2 2K
20Z5 750Ω
20Z5 2K
20Z5 3,6K
11Z1 750Ω
11Z1 2K
11Z1 5K
TO5AB
6Z3 350Ω
6Z3 550Ω
16Z2 2K
27Z2 2K
18Z5 750Ω
18Z5 2K
18Z5 3,6K
17Z3 350Ω
17Z3 550Ω
13Z7
J13
J11
J04
J02
J05
J06
G03
G09
G10
G12
G13
G04
B10
B12
B13
MATCH WITH A-A SHT 4OF 6
MATCH WITH E-E SHT 4OF 6
INTERNATIONAL BUSINESS MACHINES CORP.
NAME MFCM LOGIC 3
DEPT 8-7-64
DETAIL KEL 8-31-64
MODEL 2020
SCALE NONE
DATE
CHANGE NO.
APPROVAL
09-07-64 160656
10-22-64 161792
2-17-65 162615
DEVELOPMENT NO.
5804438
CIRCUIT AND PACKAGING STANDARD
APPROVAL
DATE
C