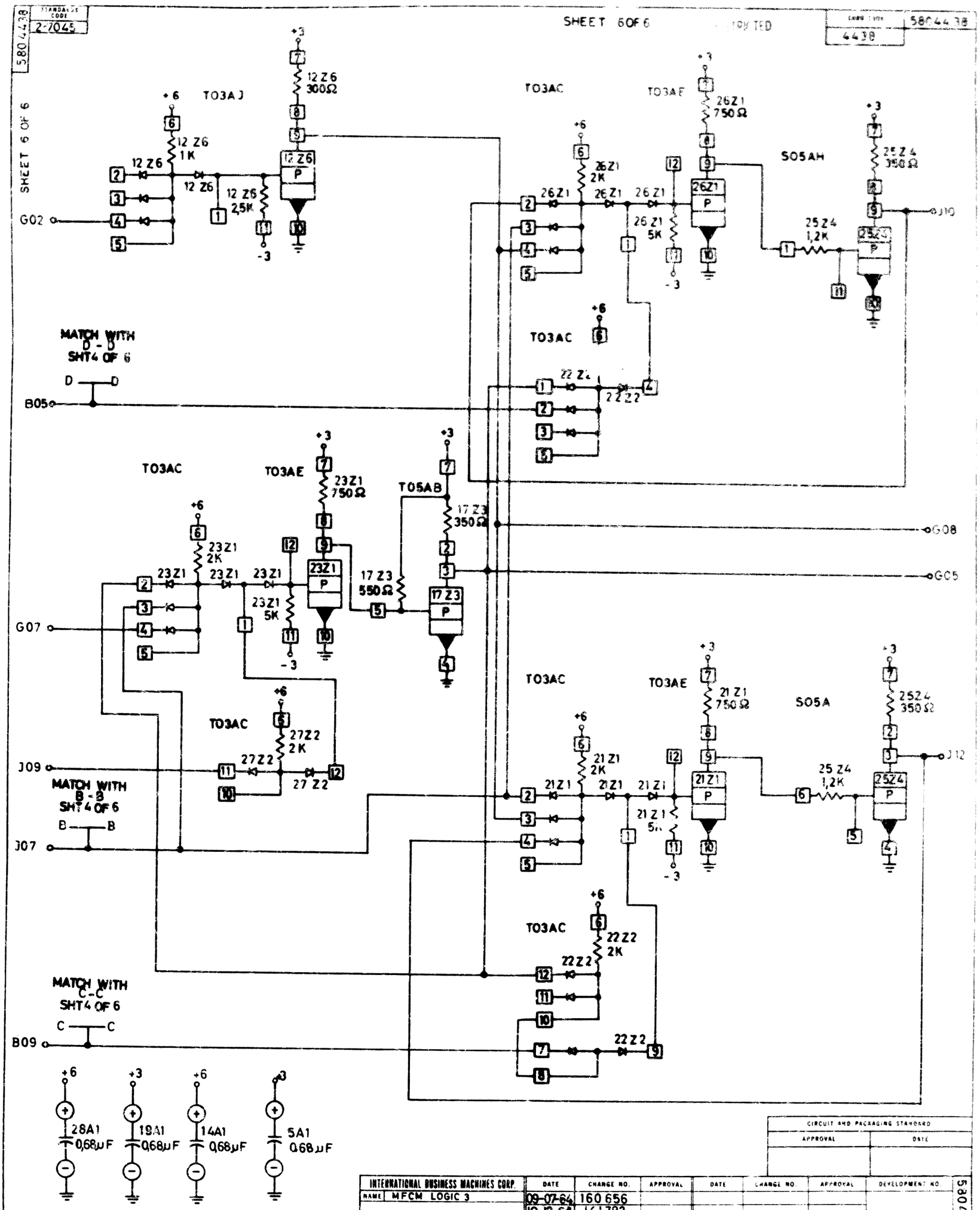
SHEET 6 OF 6
5804438
4438
TO3AJ
TO3AC
TO3AF
SO5AH
TO3AE
TO5AB
SO5A
12 Z6 300Ω
12 Z6 1K
12 Z6 2,5K
26Z1 750Ω
26Z1 2K
26 Z1 5K
25 Z4 350Ω
25 Z4 1,2K
22 Z4
22 Z2
23Z1 750Ω
23Z1 2K
23Z1 5K
17 Z3 350Ω
17 Z3 550Ω
27Z2 2K
21 Z1 750Ω
21 Z1 2K
21 Z1 5K
25Z4 350Ω
22Z2 2K
G02
G08
G05
G07
J09
J07
J10
J12
B05
B09
MATCH WITH D - D SHT4 OF 6
MATCH WITH B - B SHT4 OF 6
MATCH WITH C - C SHT4 OF 6
28A1 0,68μF
19A1 0,68μF
14A1 0,68μF
5A1 0,68μF
CIRCUIT AND PACKAGING STANDARD
APPROVAL
DATE
INTERNATIONAL BUSINESS MACHINES CORP.
NAME MFCM LOGIC 3
DESIGN DEPT 8-7-64
DETAIL KEL 8-25-64
CHECK KL
APPRO
MODEL 2020
SCALE NONE
DRAW
CHECK
DATE
CHANGE NO.
APPROVAL
DEVELOPMENT NO.
09-07-64 160 656
10-12-64 161792
2-17-65 162615
5804438
C