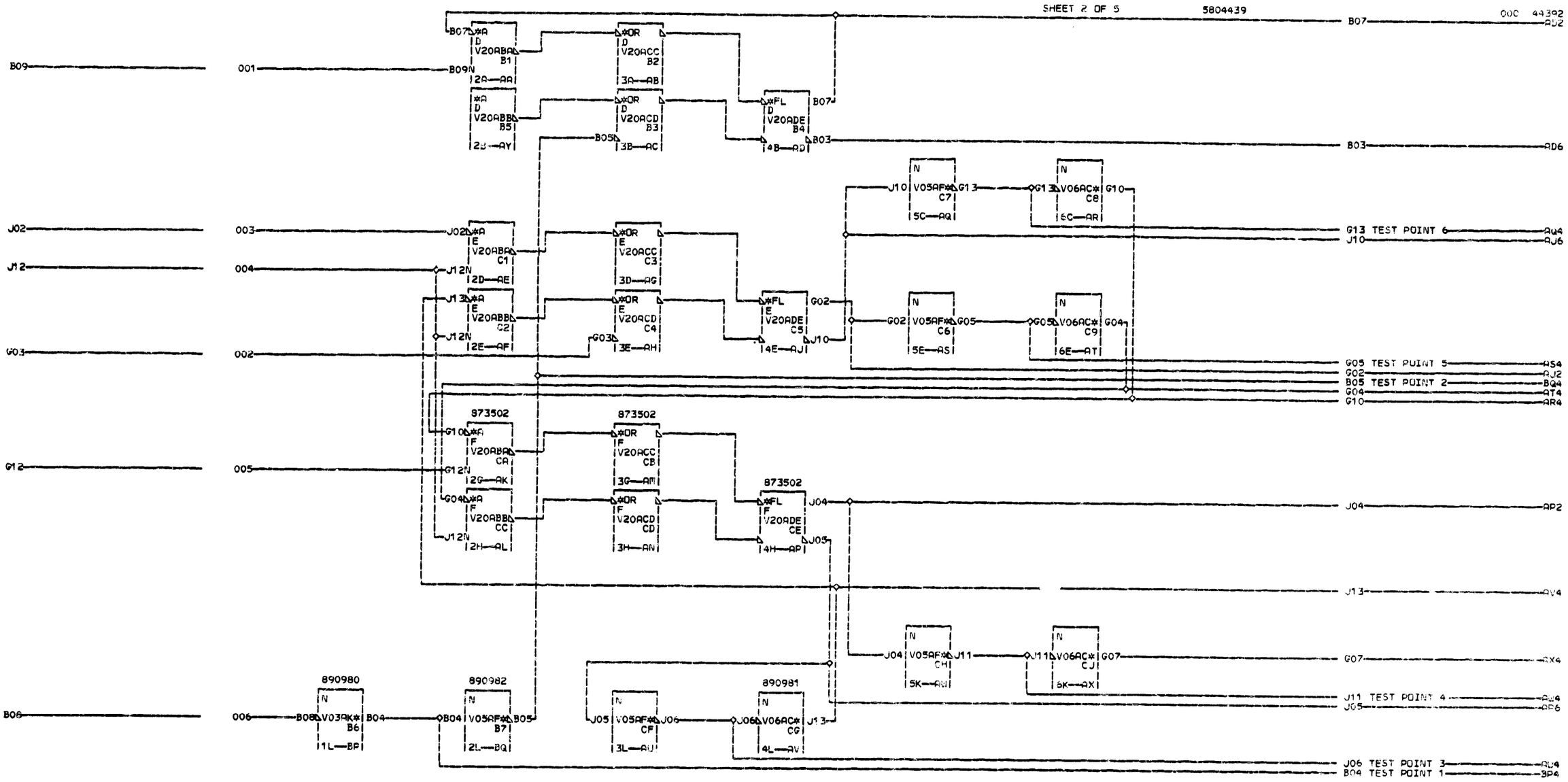

CARD SIZE0 2-24 PAC V65
VOLTAGE PINS
4 +12◊D03◊J03 12M◊D03◊J03
4 GND◊D08◊J08
3 STANDARD RESTRICTED
9
2

000

04-24-64 DEV3171
01-29-65 162428 A
03-11-65 165077 B
08-15-67 171393 C

CLOCK SYSTEM
DATE 10-05-67 MACH. ASSEMBLY
LOG 4201 FRAME
P. J. WHEELER P.N. 5804439
IBM CORP. RA BLK. BR

4 4 3 9 2 000