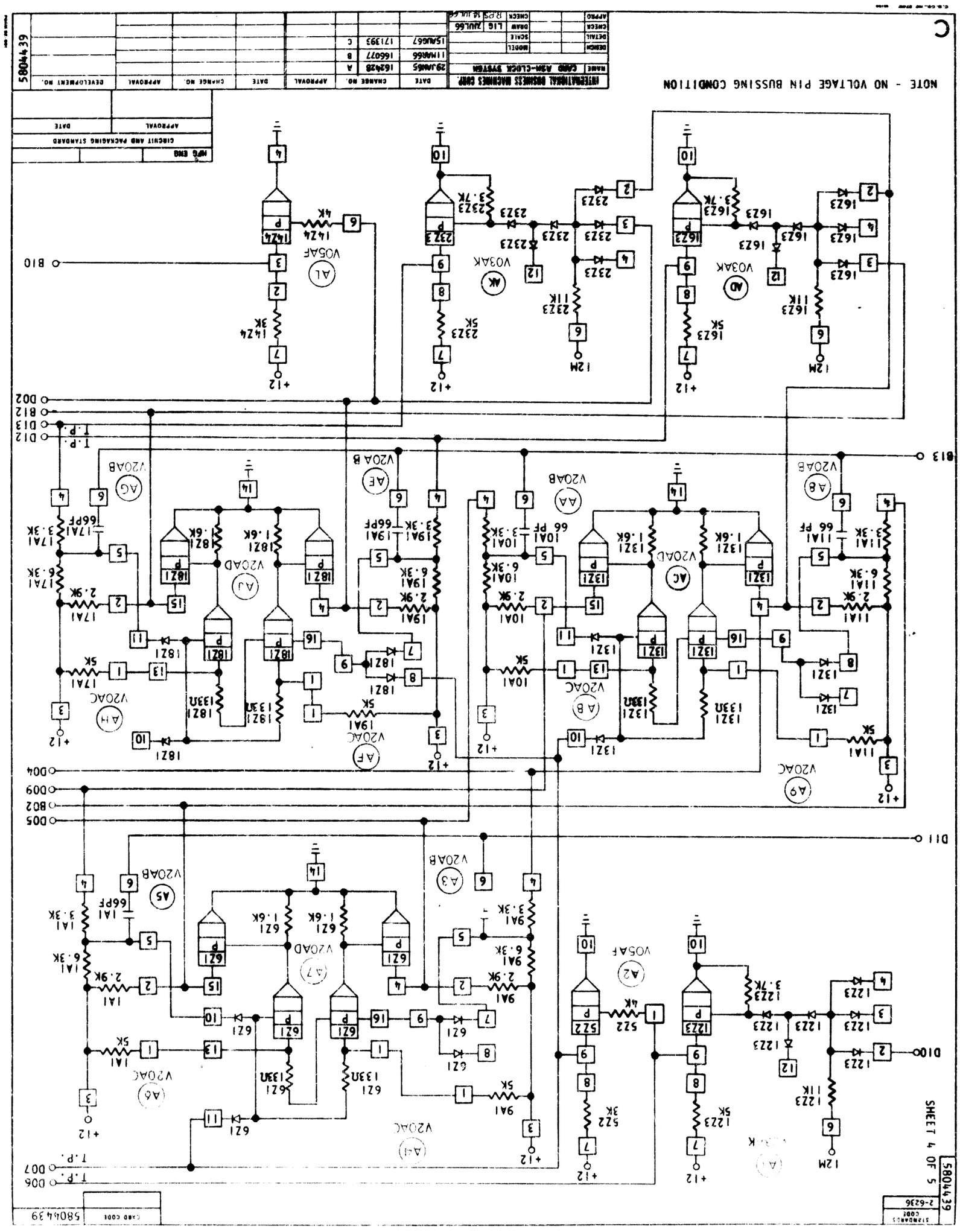
NOTE - NO VOLTAGE PIN BUSSING CONDITION
INTERNATIONAL BUSINESS MACHINES CORP.
CARD ASM-CLOCK SYSTEM
580443 9
SHEET 4 OF 5
CIRCUIT AND PACKAGING STANDARD
DATE
APPROVAL
CHANGE NO.
DEVELOPMENT NO.
STANDARDS CODE
CARD CODE
B10
B13
D02
D12
D13
D04
D09
B02
D05
D11
D10
D06
D07
T.P.
+12
12M
V20AC
V20AB
V20AD
V03AK
V05AF
V05AK