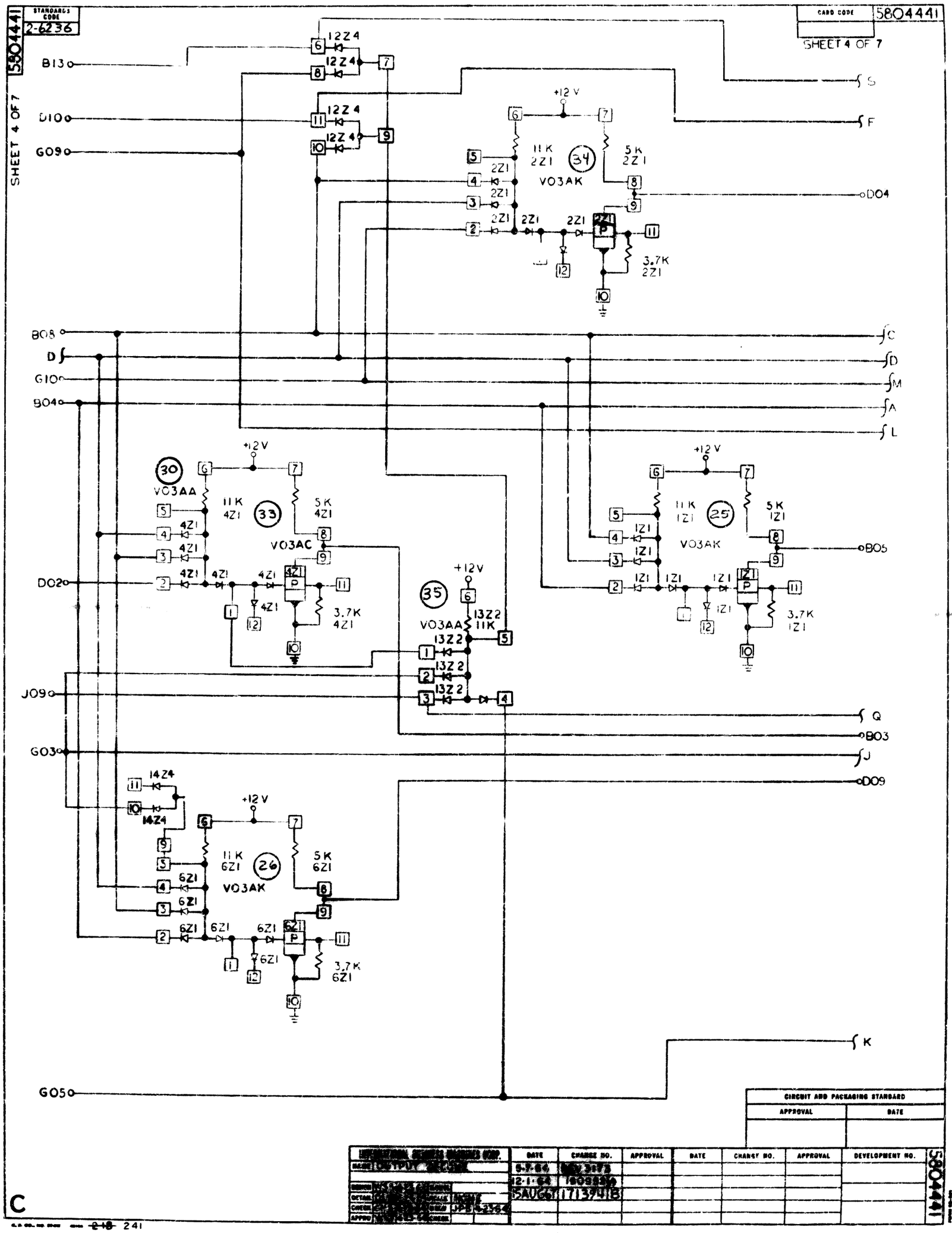
5804441
STANDARDS CODE 2-6236
CARD CODE 5804441
SHEET 4 OF 7
B13
D10
G09
B08
D
G10
B04
D02
J09
G03
G05
S
F
D04
C
D
M
A
L
B05
Q
B03
J
D09
K
12Z4
11K 2Z1
5K 2Z1
3.7K 2Z1
VO3AK
+12 V
VO3AA
11K 4Z1
5K 4Z1
VO3AC
3.7K 4Z1
11K 1Z1
5K 1Z1
3.7K 1Z1
13Z2 11K
14Z4
11K 6Z1
5K 6Z1
3.7K 6Z1
CIRCUIT AND PACKAGING STANDARD
APPROVAL
DATE
CHANGE NO.
DEVELOPMENT NO.
C