STANDARDS CODE 2-6236

5804441

CARD CODE 5804441

SHEET 6 OF 7

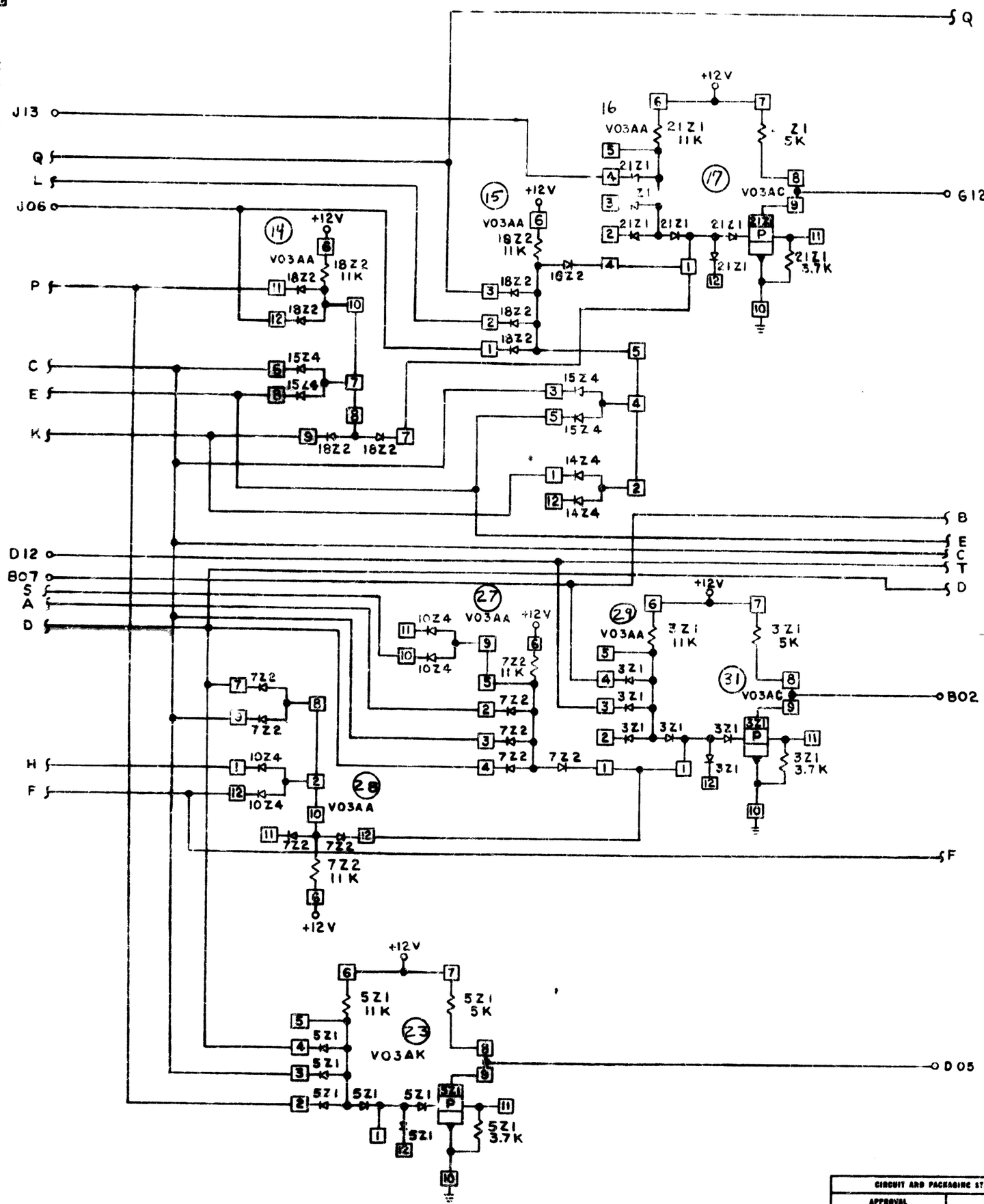

CIRCUIT AND PACKAGING STANDARD

APPROVAL	DATE

DATE	CHANGE NO.	APPROVAL	DATE	CHANGE NO.	APPROVAL	DEVELOPMENT NO.
5-7-64	DEV 3178					
12-1-64	160 9824					
15AUG67	1713048					

NONE

5804441

C

241