STANDARDS CODE 2-7045

CARD CODE 580444

RESTRICTED

SHEET 9 OF 9

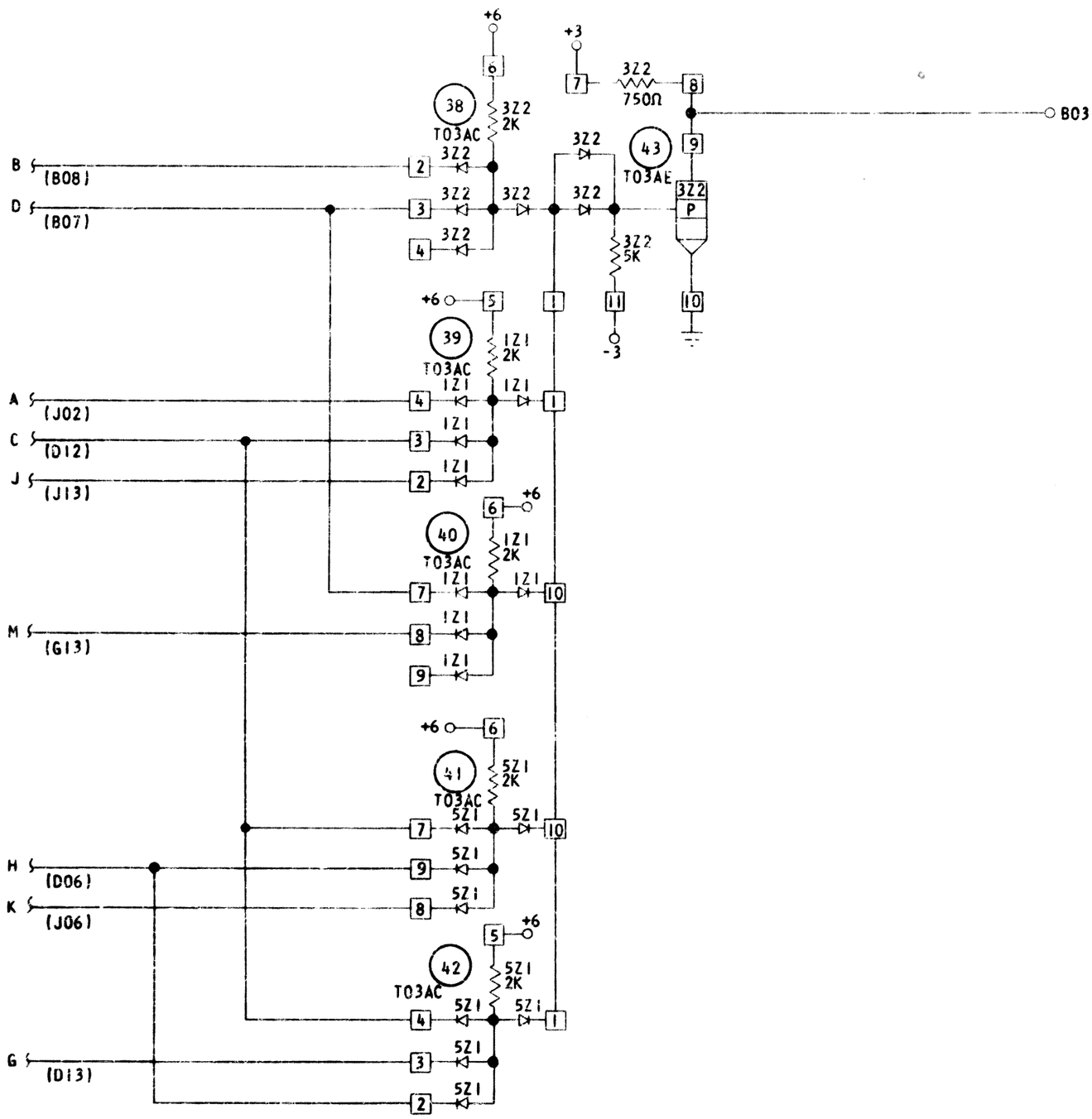

CIRCUIT AND PACKAGING STANDARD

APPROVAL	DATE

INTERNATIONAL BUSINESS MACHINES CORP.			DATE	CHANGE NO.	APPROVAL	DATE	CHANGE NO.	APPROVAL	DEVELOPMENT NO.
NAME	HI-LO GATES AND TRUE COMPLEMENT		6-5-64	DEV 3345					SE391
DESIGN		MODEL	8-2-64	161223 A					
DETAIL	JKBH-1-64	SCALE NONE	6-4-65	164554 B					
CHECK	PEH 1-24	DRAW MDE 1-23-68	7-29-65	165306 C					
APPRO		CHECK JLS 1-6-64	20 JUL 67	172001 D					

580444

C