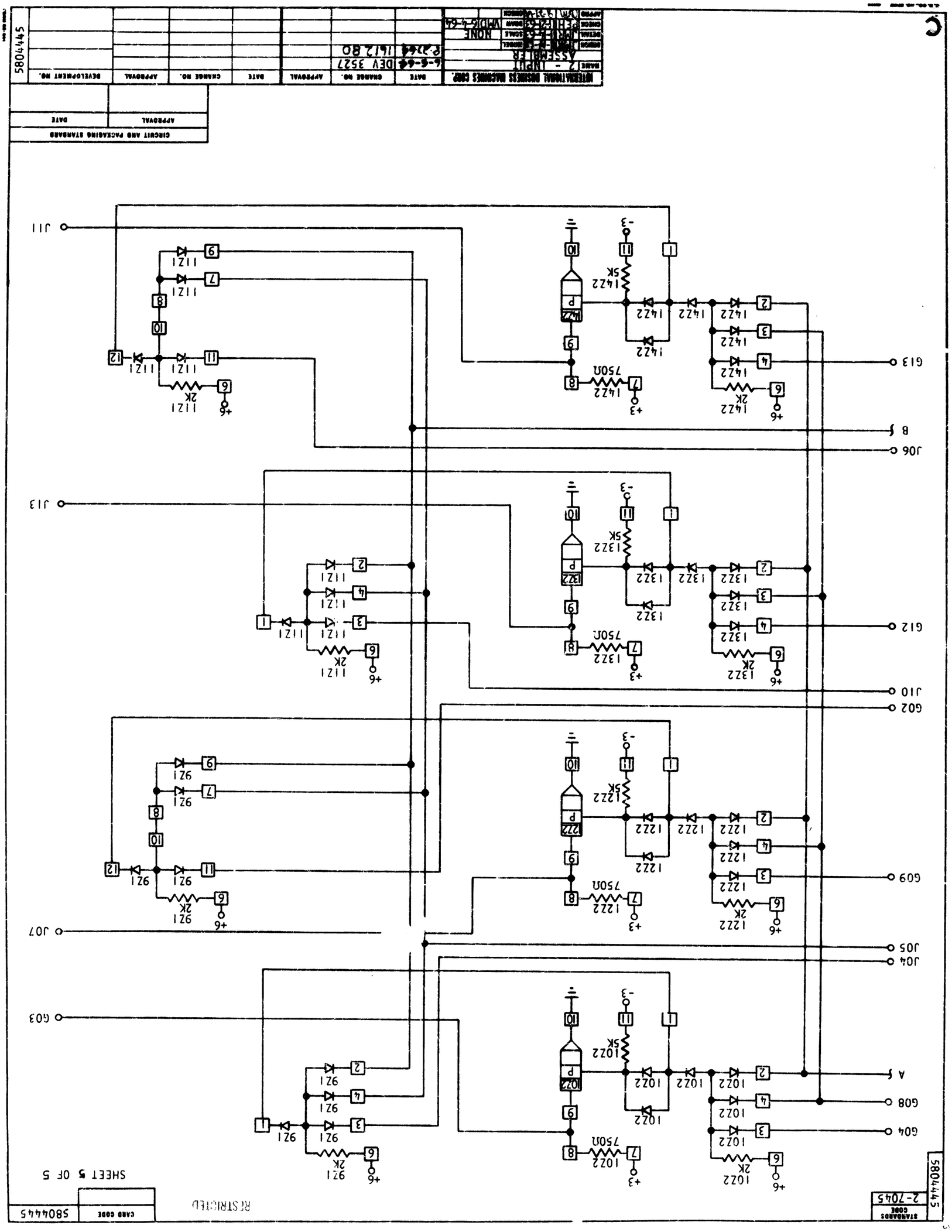
INTERNATIONAL BUSINESS MACHINES CORP.
NAME Z - INPUT ASSEMBLER
DATE 6-6-64
DEV 3527
P 27464
1612 80
NONE
WMD 6-4-64
CIRCUIT AND PACKAGING STANDARD
APPROVAL
DATE
CHANGE NO.
DEVELOPMENT NO.
5804445
STANDARDS CODE
2-7045
CARD CODE
SHEET 5 OF 5
RESTRICTED
G13
B
J06
G12
J10
G02
G09
J05
J04
J07
G03
G04
G08
A
J11
J13
+6
+3
-3
2K
750Ω
5K