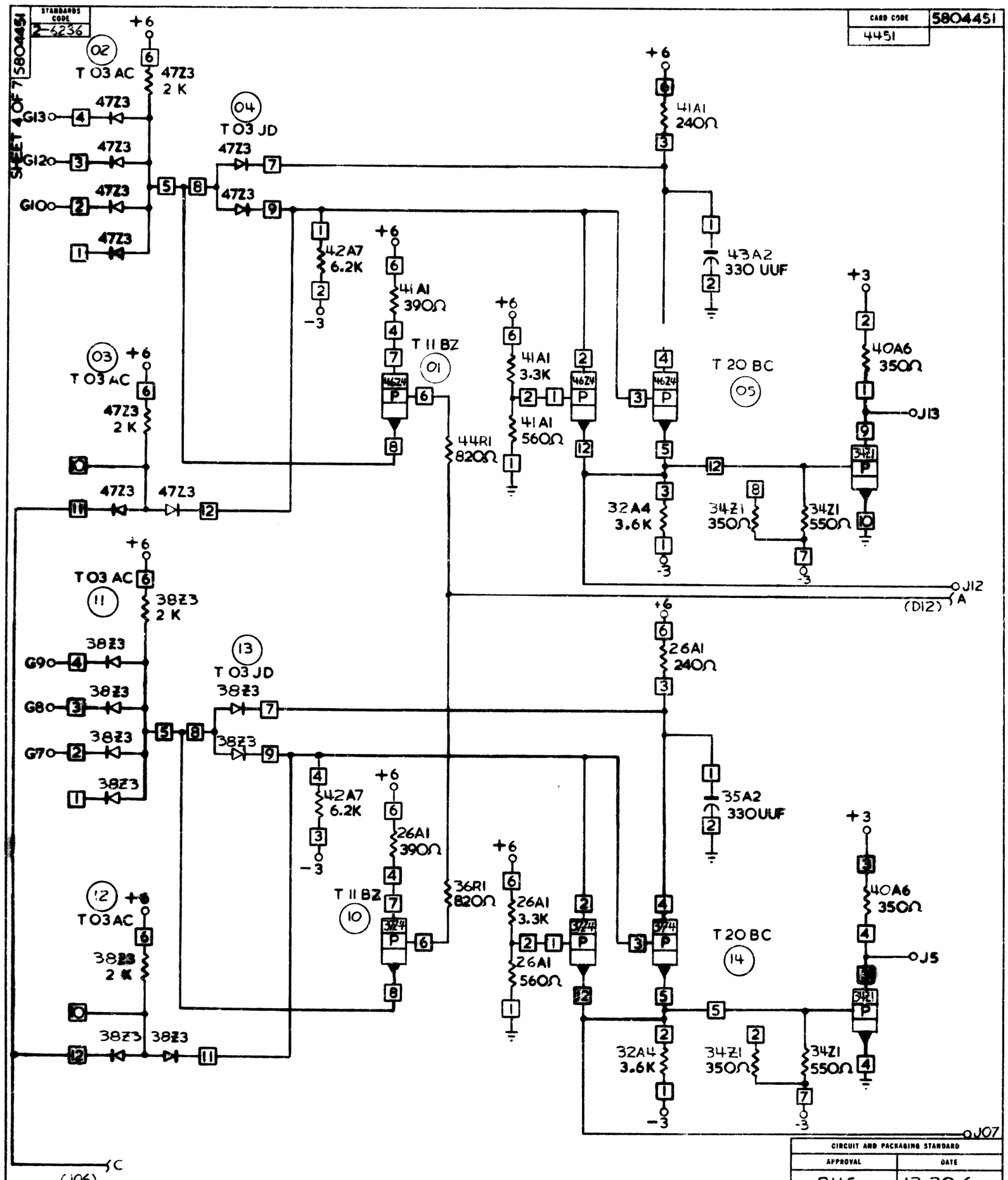

CIRCUIT AND PACKAGING STANDARD	
APPROVAL	DATE
P.H.S.	12-20-6

VOLTAGE PINS J8 – D8
J3 – D3
G11 – B11
BUSSED ON THIS CARD G6 – B6

C

INTERNATIONAL BUSINESS MACHINES CORP.			
NAME	CARD ASM		
	6 X GATED LATCH		
DESIGN	KJS	MODEL	
DETAIL		SCALE	NONE
CHECK		DRAW	A.P.
APPRO		CHECK	

DATE	CHANGE NO.		APPROVAL	DATE	CHANGE NO.	APPROVAL	DEVELOPMENT NO.
9 NOV 64	162130	A					
5 MAY 66	168032	B					
13 DEC 66	169256	C					
19 JAN 67	169257	D					
4 SEP 67	171766	E					5804451

5804451