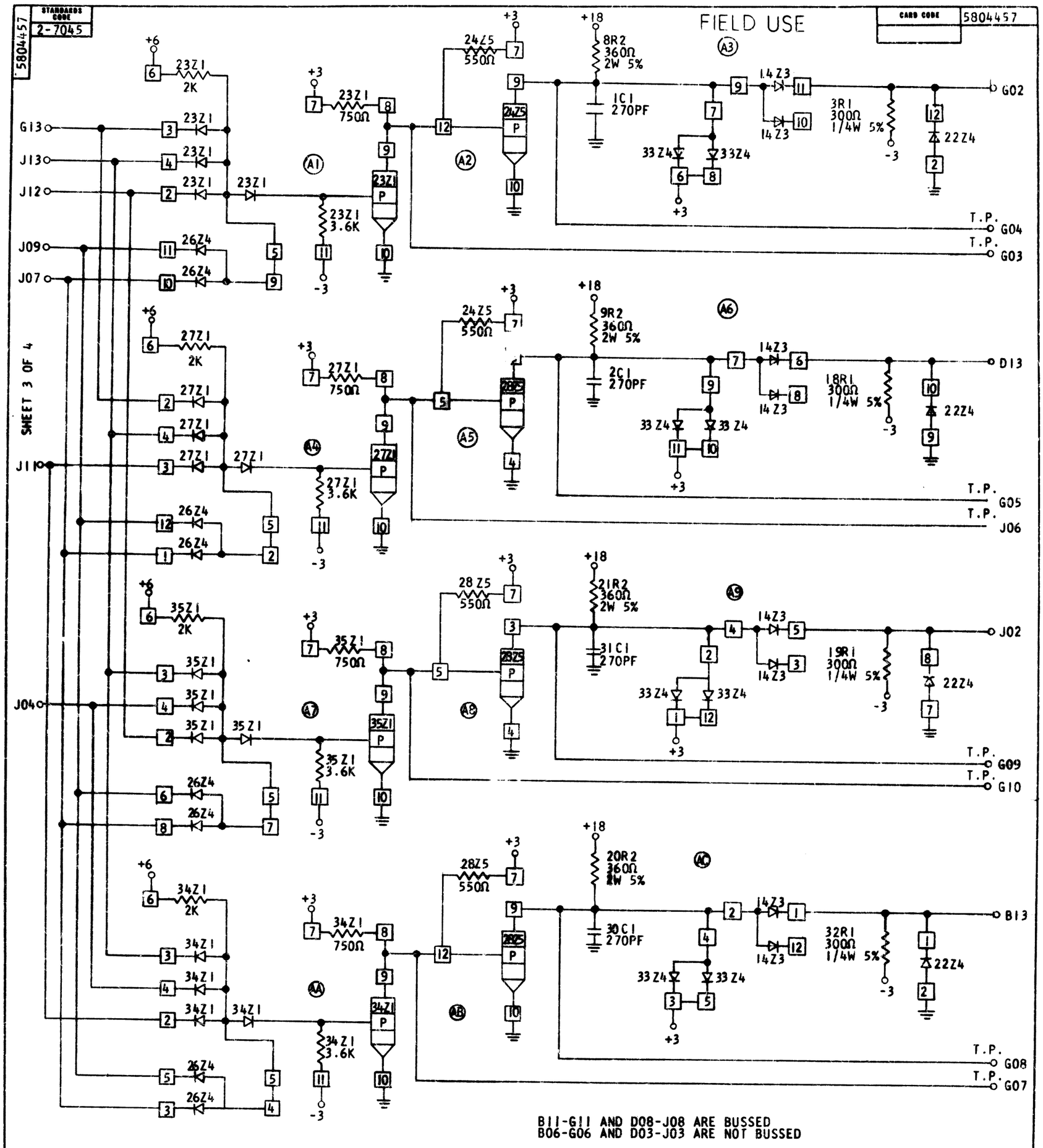

CIRCUIT AND PACKAGING STANDARD	
APPROVAL	DATE

INTERNATIONAL BUSINESS MACHINES CORP.				DATE	CHANGE NO.	APPROVAL	DATE	CHANGE NO.	APPROVAL	DEVELOPMENT NO.
NAME	CARD ASM DECODE NO. 5			9-22-64	DEV 4152					
				1-18-65	162822					
DESIGN		MODEL		3NOV65	166819 B					
DETAIL		SCALE	NONE							
CHECK		DRAW	VMD 2-3-65							
APPRO		CHECK								

5804457

C