5804463

STANDARDS CODE 2-7045

SHEET 4 OF 7

CARD CODE 5804463

RESTRICTED*

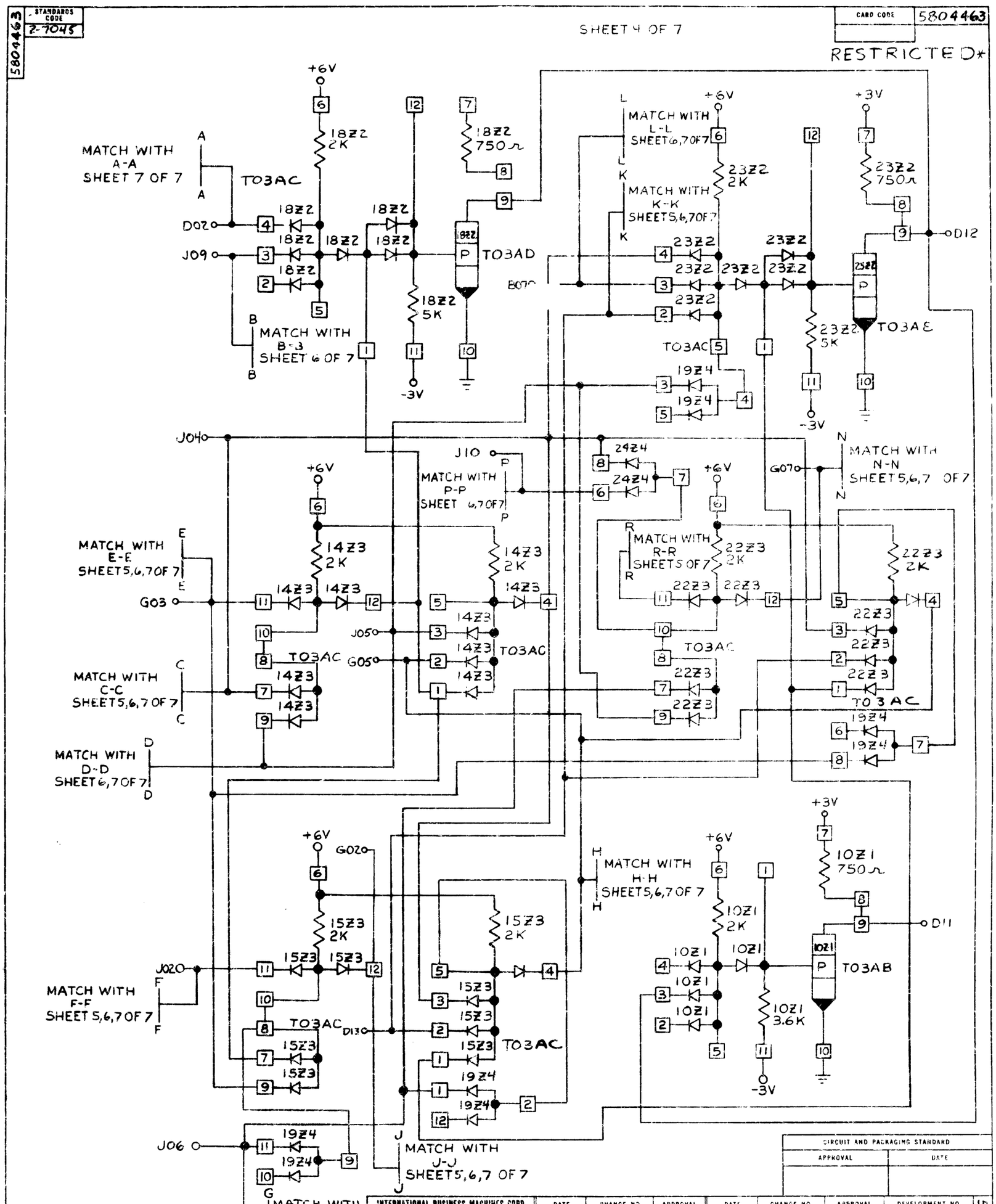

CIRCUIT AND PACKAGING STANDARD	
APPROVAL	DATE

INTERNATIONAL BUSINESS MACHINES CORP.													
NAME	TRANSLATOR = 8-4-2-1				DATE	CHANGE NO.	APPROVAL	DATE	CHANGE NO.	APPROVAL	DEVELOPMENT NO.	5804463
	EBCDIC = TO = PT/T = CARD 1					SE-556						
DESIGN	VE	8-18-64	MODEL	SLT	11-12-64	162308						
DETAIL	VE	8-18-64	SCALE	NONE								
CHECK	VE	8-18-64	DRAW	VZ 8-18-64								
APPRO			CHECK	RJM 9-1-64								

C