5804463

STANDARDS CODE 2-7045

SHEET 7 OF 7

CARD CODE 5804463

RESTRICTED *

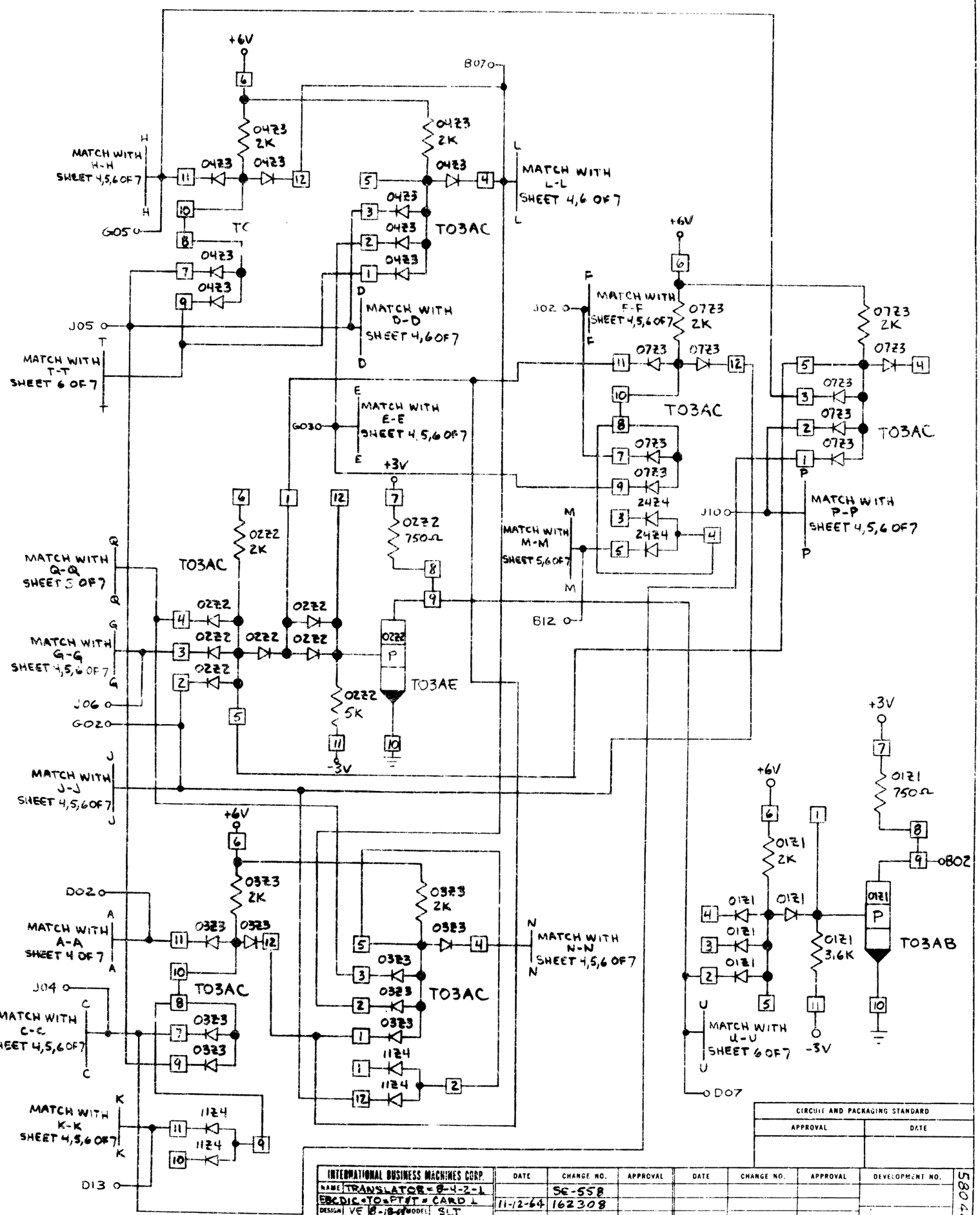

CIRCUIT AND PACKAGING STANDARD	
APPROVAL	DATE

| INTERNATIONAL BUSINESS MACHINES CORP. | | |