| | | | | | | | | | |
|---|---|---|---|---|---|---|---|---|---|
| 2-7048 | | | | | | | | | 511690 |
| CARD CODE | | | | | | | | | 5804464 |
| 4464 | | | | | | | | | SHEET 4 OF 8 |

RESTRICTED

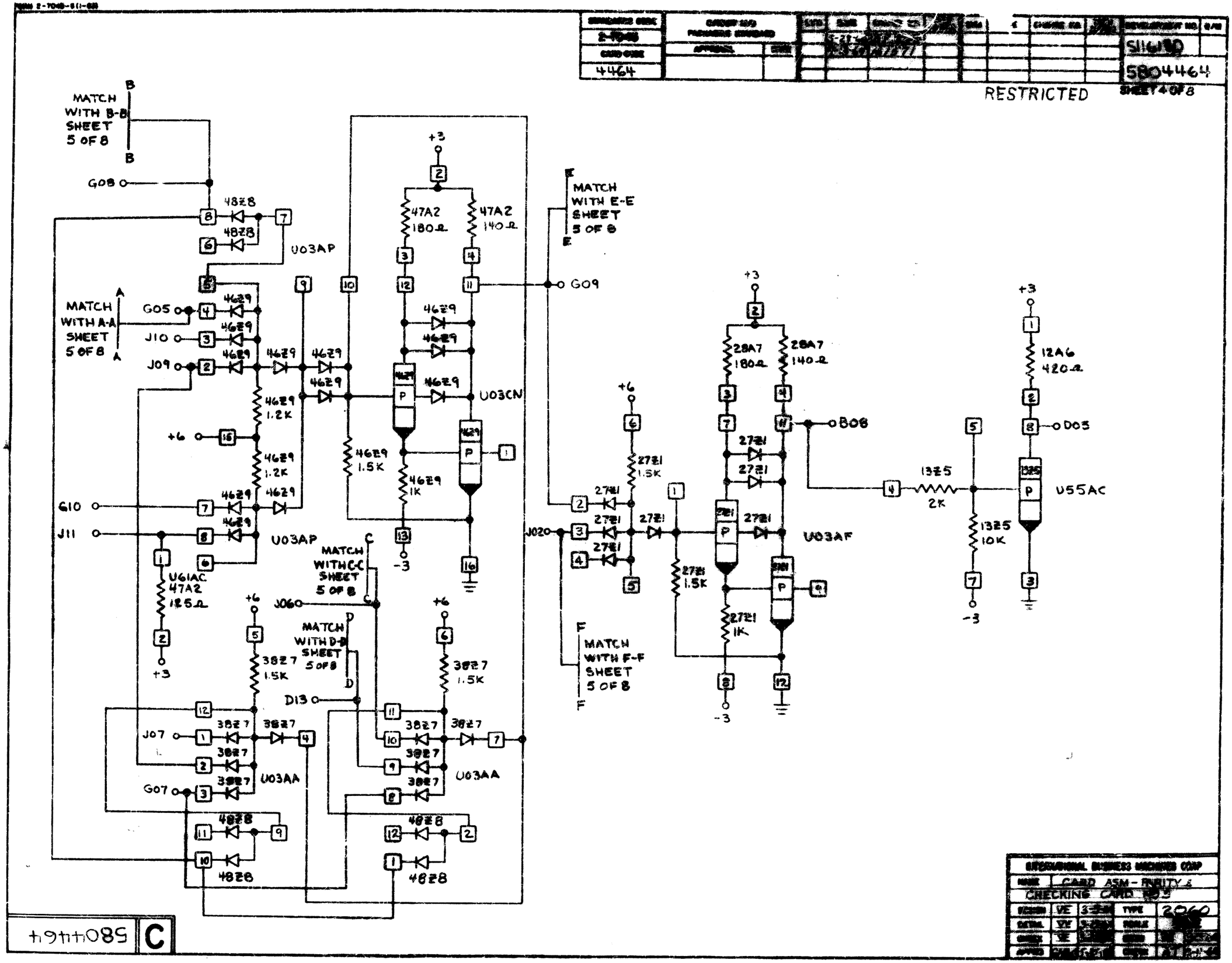


| | | | | | |
|---|---|---|---|---|---|
| INTERNATIONAL BUSINESS MACHINES CORP | | | | | |
| NAME | CARD ASM - PARITY & CHECKING CARD | | | | |
| VERIFIED | VE | | TYPE | 2060 | |
| DETAIL | VE | | PARTS | | |
| CHECKED | VE | | | | |
| APPROVED | | | DATE | | |

580 4464 C