STANDARDS CODE	CIRCUIT AND PROCESSES STANDARD		STAT	DATE	CHANGE NO.							
2-7048	APPROVAL	DATE		5-28-64								
CARD CODE				9-18-64								
4464												

5116150

58044464

SHEET 7 OF 8

RESTRICTED

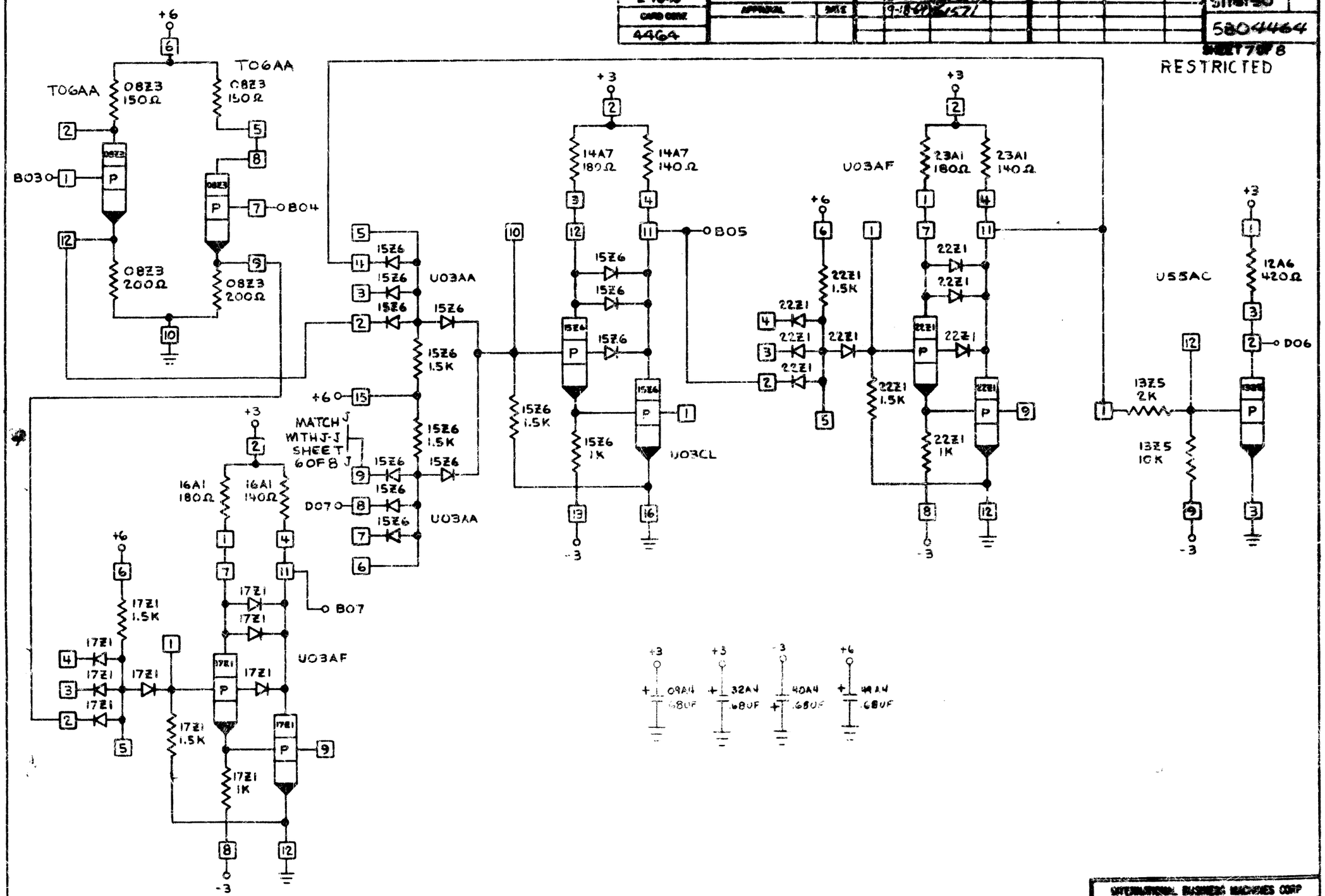

INTERNATIONAL BUSINESS MACHINES CORP				
NAME	CARD ASM - PARITY E			
CHECKING CARD NO 5				
DESIGN	VE	3-5-64	TYPE	2060
DETAIL	VE	3-5-64	SCALE	NONE
CHECK	VE	3-5-64	DRAW	VE 3-5-64
APPRO	GMM	5-25-64	CHECK	AT 3-1-66

C 58044464