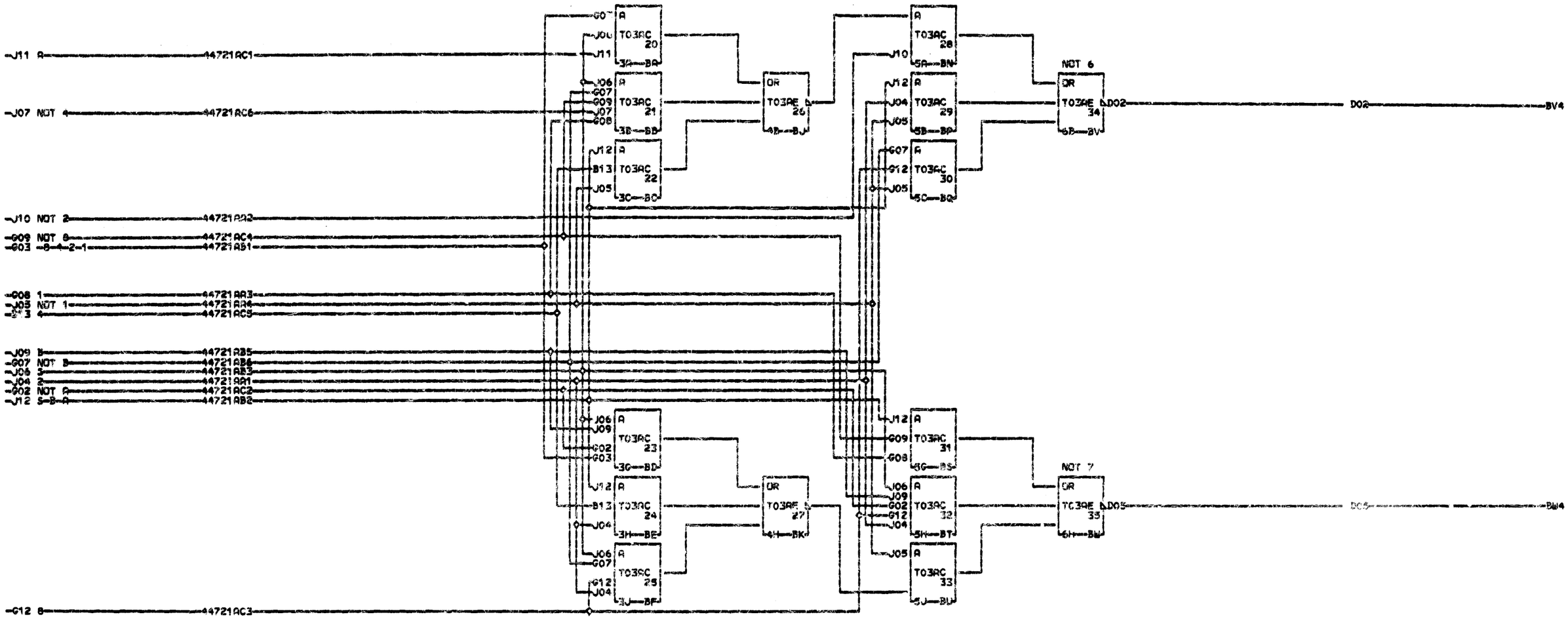

10-19-64 161609

RESTRICTED

PTTC-EBCDIC TRANSLATOR
BITS 4567
DATE 10-12-64 MACH. ASSEMBLY
LOG .95 FRAME 01
CD PG 2 OF 2 P.N. 3804472
IBM CORP. PD BLK. BX

```
4
4
7
2 #-6EQ-2-QSA-8-4-2-1+S-B-3-41+
2 #S-B-A4-1Q+S-B-A2-1+-B8-1
  #-7EQ-1-QSB-A-8-4-2-1+S-B-A42
000#+S-B32Q+S-B-Q-81+SB-A82
  #2AI 8AOI 9ACX 3FDD 1II 1DCI
```