STANDARDS CODE	CIRCUIT AND PACKAGING STANDARD		SYM	DATE	CHANGE NO.	TECH APPRO	SYM	DATE	CHANGE NO.	TECH APPRO	DEVELOPMENT NO	Q/M
2-7045				1-16-65	DEV 3740							
CARD CODE	APPROVAL	DATE		4-20-65	1643643 A							
4474	G.H.M.	4-5-65									5804474	

RESTRICTED

SHEET 4 OF 7

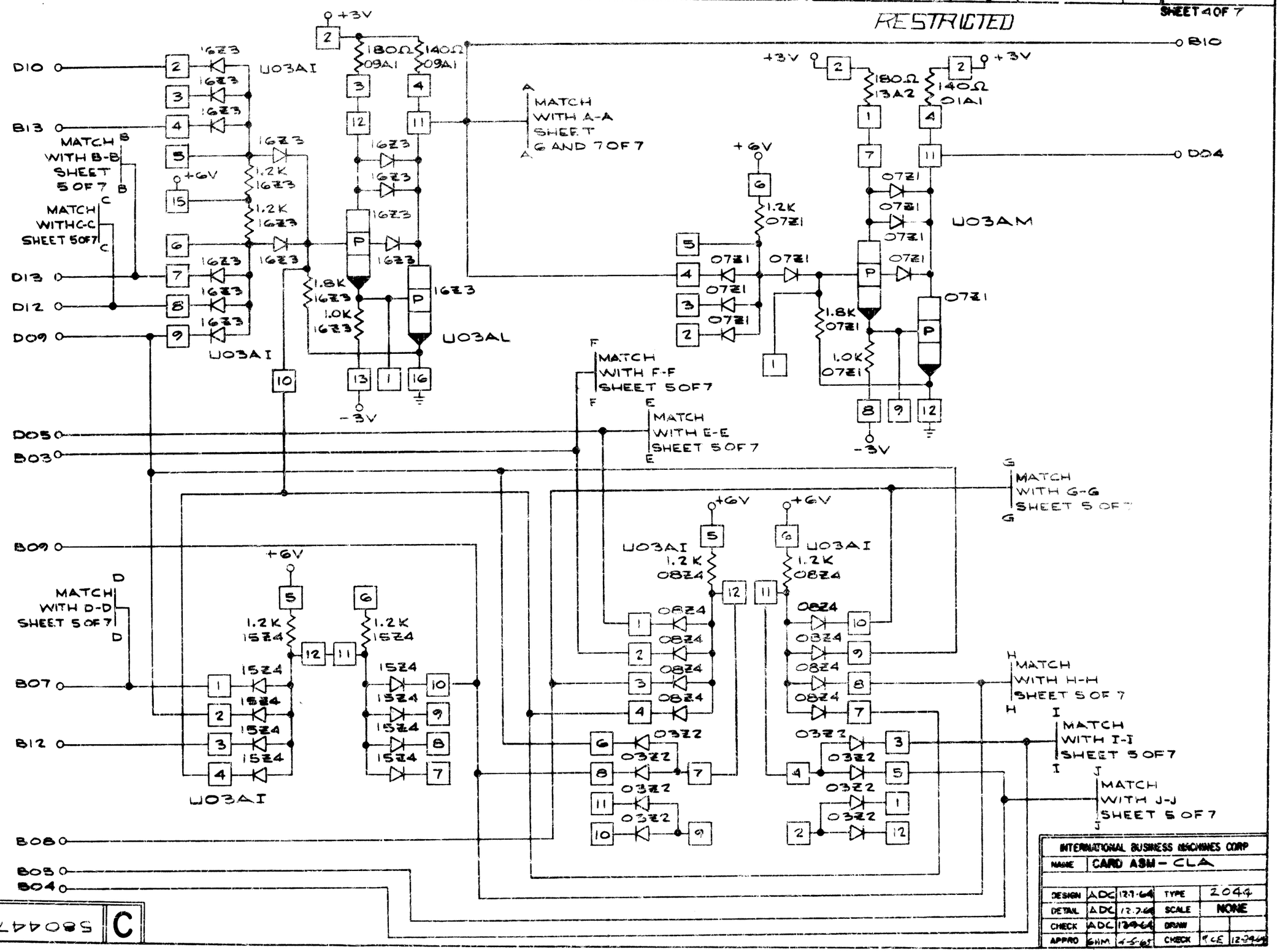

INTERNATIONAL BUSINESS MACHINES CORP				
NAME	CARD ASM – CLA			
DESIGN	ADC	12-7-64	TYPE	2044
DETAIL	ADC	12-7-64	SCALE	NONE
CHECK	ADC	12-9-64	DRAW	
APPRO	GHM	4-5-65	CHECK	RCE 12-9-64

5804474 C