STANDARDS CODE	CIRCUIT AND PACKAGING STANDARD		SYM	DATE	CHANGE NO.	TECH APPRO	SYM	DATE	CHANGE NO.	TECH APPRO	DEVELOPMENT NO.	Q/M
2-7045				1-15-65	DEV3740							
CARD CODE	APPROVAL	DATE		4-20-65	164360-A							
4474	G.H.M.	4-5-65									5804474	

SHEET 7 OF 7

RESTRICTED

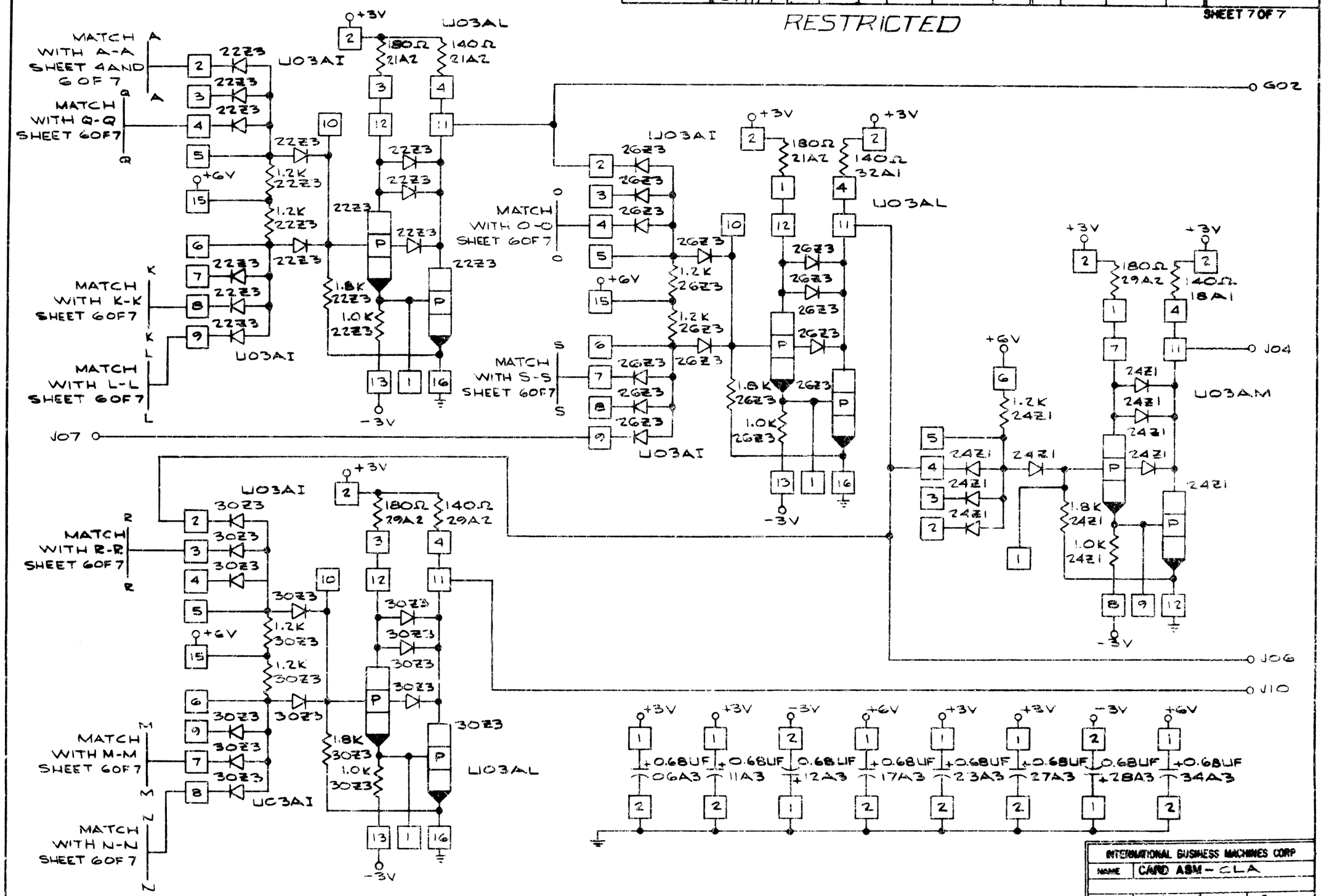

INTERNATIONAL BUSINESS MACHINES CORP					
NAME	CARD ASM - CLA				
DESIGN	ADC	12-7-64	TYPE	2044	
DETAIL	ADC	12-7-64	SCALE	NONE	
CHECK	ADC	12-9-64	DRAW		
APPRO	GHM	4-5-65	CHECK	RCE	12-29-64

5804474 C