FORM 2-7045-6 (8-63)

STANDARDS CODE	CIRCUIT AND PACKAGING STANDARD		SYM	DATE	CHANGE NO	TECH APPRO	SYM	DATE	CHANGE NO	TECH APPRO	DEVELOPMENT NO	Q/M
2-7045				7-7-65	DV5182-1							
CARD CODE	APPROVAL	DATE			122 824							
4482	GHM	7-7-65									5804482	

SHEET 6 OF 6

OBSOLETE

RESTRICTED

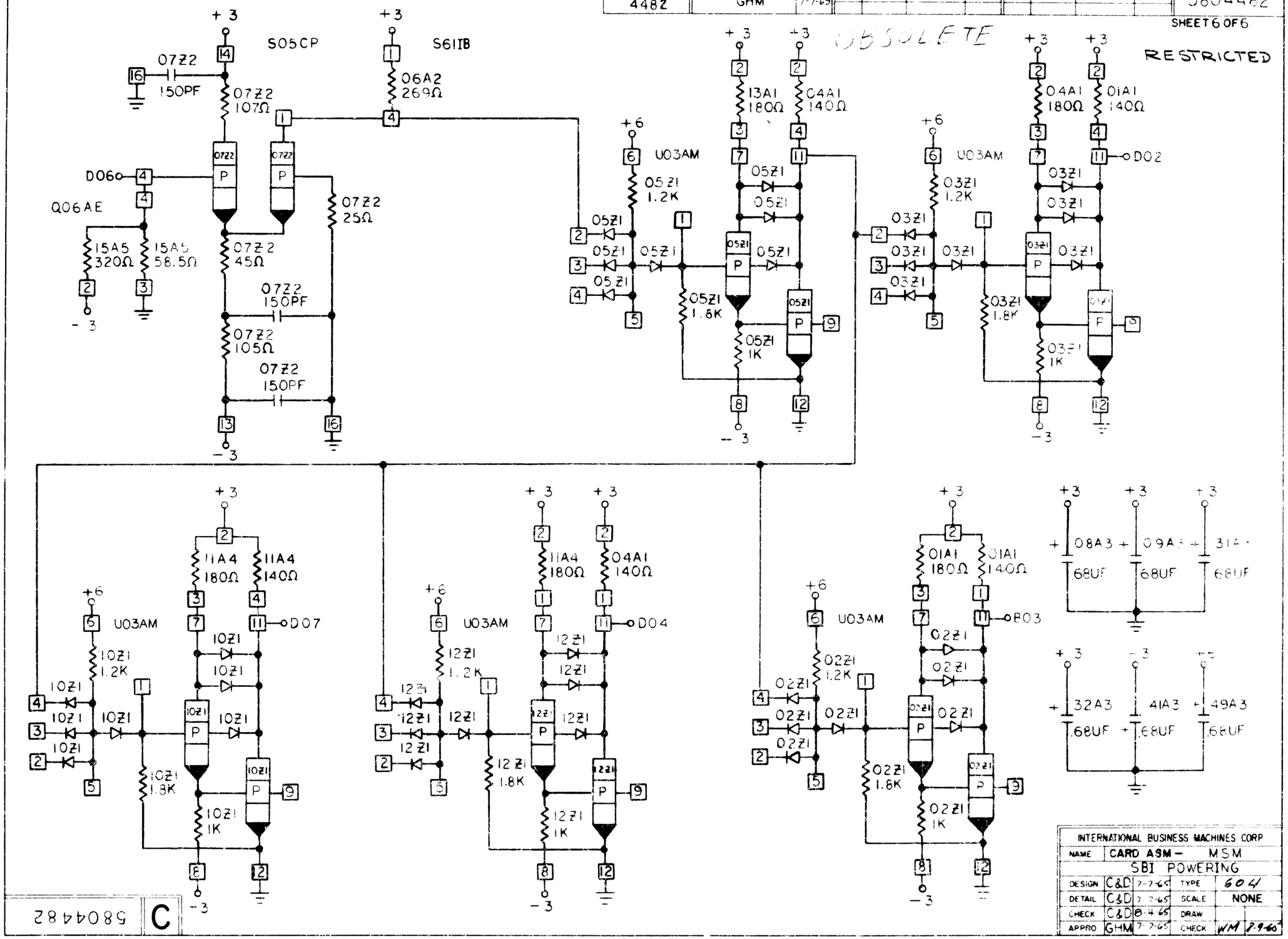

INTERNATIONAL BUSINESS MACHINES CORP				
NAME	CARD ASM — MSM			
	SBI POWERING			
DESIGN	C&D	7-7-65	TYPE	604
DETAIL	C&D	7-7-65	SCALE	NONE
CHECK	C&D	8-4-65	DRAW	
APPRO	GHM	7-7-65	CHECK	WM 8-9-65

C 5804482