STANDARDS CODE	CIRCUIT AND PACKAGING STANDARD		SYM	DATE	CHANGE NO	TECH APPRO	SYM	DATE	CHANGE NO	TECH APPRO	DEVELOPMENT NO. SYM
2-7045				7-7-65	DV5170 1						
CARD CODE	APPROVAL	DATE									5804483
4483	GHM	7-7-65									SHEET 3 OF 4

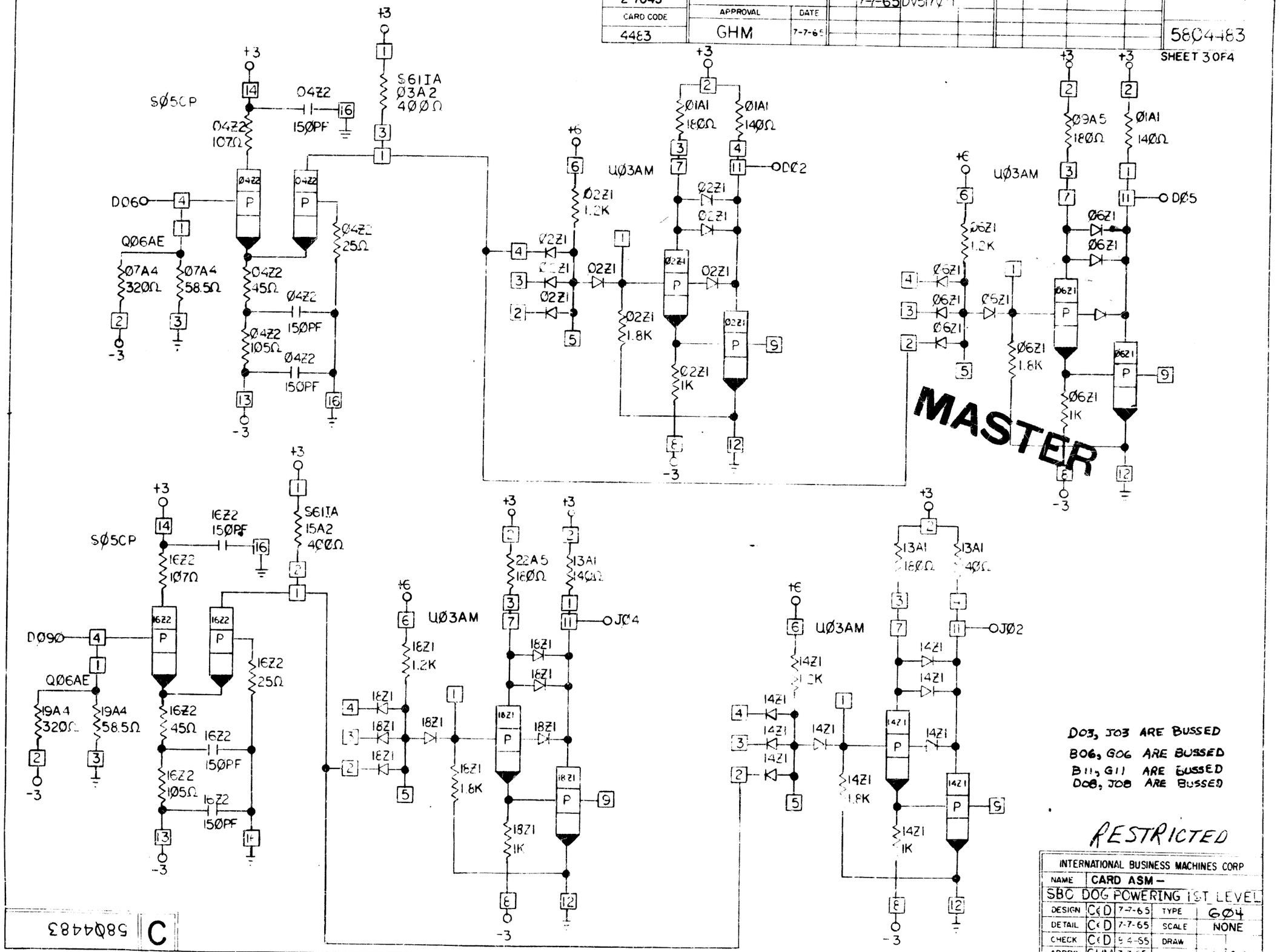

D03, J03 ARE BUSSED
B06, G06 ARE BUSSED
B11, G11 ARE BUSSED
D08, J08 ARE BUSSED

RESTRICTED

INTERNATIONAL BUSINESS MACHINES CORP				
NAME	CARD ASM – SBC DOG POWERING 1ST LEVEL			
DESIGN	C&D	7-7-65	TYPE	604
DETAIL	C&D	7-7-65	SCALE	NONE
CHECK	C&D	9-4-65	DRAW	
APPRO	GHM	7-7-65	CHECK	JEM 8-7-65